Illinois Department of Transportation

Local Public Agency
Formal Contract Proposal

COVER SHEET

Proposal Submitted By:

Contractor's Name

Contractor's Address | City | State | Zip Code

STATE OF ILLINOIS

Local Public Agency: Hopedale Township Road District | County: Tazewell | Section Number: 17-10135-00-BR

Route(s) (Street/Road Name): FAS 1774 (Prairie Road) | Type of Funds: Tonwnship Bridge Program

☐ Proposal Only ☒ Proposal and Plans ☐ Proposal only, plans are separate

Submitted/Approved
For Local Public Agency:

For a County and Road District Project

Submitted/Approved

Highway Commissioner Signature | Date: 2-24-21

Submitted/Approved

County Engineer/Superintendent of Highways | Date: 02-24-2021

For a Municipal Project

Submitted/Approved/Passed

Signature | Date

Official Title

Department of Transportation

Released for bid based on limited review

Regional Engineer Signature | Date

Note: All proposal documents, including Proposal Guaranty Checks or Proposal Bid Bonds, should be stapled together to prevent loss when bids are processed.

Local Public Agency	County	Section Number	Route(s) (Street/Road Name)
Hopedale Township Road Distric	Tazewell	17-10135-00-BR	FAS 1774 (Prairie Road)

NOTICE TO BIDDERS

Sealed proposals for the project described below will be received at the office of Tazewell County Engineer (Name of Office)

21308 IL Route 9, Tremont, IL 61568 (Address) until 8:00 AM (Time) on 3/18/2021 (Date).

Sealed proposals will be opened and read publicly at the office of Tazewell County Engineer (Name of Office)

21308 IL Route 9, Tremont, IL 61568 (Address) at 8:00 AM (Time) on 3/18/2021 (Date).

DESCRIPTION OF WORK

Location	Project Length
FAS 1774 (Prairie Road) over Indian Creek	400.00 FT

Proposed Improvement

Remove existing RC tee beam bridge and replace with a single-span deck beam bridge on concrete pile bent abutments and other collateral work.

1. Plans and proposal forms will be available in the office of

Tazewell County Engineer
21308 IL Route 9, Tremont, IL 61568

2. ☒ Prequalification

   If checked, the 2 apparent as read low bidders must file within 24 hours after the letting an "Affidavit of Availability" (Form BC 57) in triplicate, showing all uncompleted contracts awarded to them and all low bids pending award for Federal, State, County, Municipal and private work. One original shall be filed with the Awarding Authority and two originals with the IDOT District Office.

3. The Awarding Authority reserves the right to waive technicalities and to reject any or all proposals as provided in BLRS Special Provision for Bidding Requirements and Conditions for Contract Proposals.

4. The following BLR Forms shall be returned by the bidder to the Awarding Authority:
   a. Local Public Agency Formal Contract Proposal (BLR 12200)
   b. Schedule of Prices (BLR 12201)
   c. Proposal Bid Bond (BLR 12230) (if applicable)
   d. Apprenticeship or Training Program Certification (BLR 12325) (do not use for project with Federal funds.)
   e. Affidavit of Illinois Business Office (BLR 12326) (do not use for project with Federal funds)

5. The quantities appearing in the bid schedule are approximate and are prepared for the comparison of bids. Payment to the Contractor will be made only for the actual quantities of work performed and accepted or materials furnished according to the contract. The scheduled quantities of work to be done and materials to be furnished may be increased, decreased or omitted as hereinafter provided.

6. Submission of a bid shall be conclusive assurance and warranty the bidder has examined the plans and understands all requirements for the performance of work. The bidder will be responsible for all errors in the proposal resulting from failure or neglect to conduct an in depth examination. The Awarding Authority will, in no case, be responsible for any costs, expenses, losses or changes in anticipated profits resulting from such failure or neglect of the bidder.

7. The bidder shall take no advantage of any error or omission in the proposal and advertised contract.

8. If a special envelope is supplied by the Awarding Authority, each proposal should be submitted in that envelope furnished by the Awarding Agency and the blank spaces on the envelope shall be filled in correctly to clearly indicate its contents. When an envelope other than the special one furnished by the Awarding Authority is used, it shall be marked to clearly indicate its contents. When sent by mail, the sealed proposal shall be addressed to the Awarding Authority at the address and in care of the official in whose office the bids are to be received. All proposals shall be filed prior to the time and at the place specified in the Notice to Bidders. Proposals received after the time specified will be returned to the bidder unopened.

9. Permission will be given to a bidder to withdraw a proposal if the bidder makes the request in writing or in person before the time for opening proposals.

Local Public Agency	County	Section Number	Route(s) (Street/Road Name)
Hopedale Township Road Distric	Tazewell	17-10135-00-BR	FAS 1774 (Prairie Road)

PROPOSAL

1. Proposal of _____
Contractor's Name

_____.
Contractor's Address

2. The plans for the proposed work are those prepared by WHKS & Co.,3695 6th St Frontage Rd West, Suite A Spfld and approved by the Department of Transportation on _____.

3. The specifications referred to herein are those prepared by the Department of Transportation and designated as "Standard Specifications for Road and Bridge Construction" and the " Supplemental Specifications and Recurring Special Provisions" thereto, adopted and in effect on the date of invitation for bids.

4. The undersigned agrees to accept, as part of the contract, the applicable Special Provisions indicated on the "Check Sheet for Recurring Special Provisions" contained in this proposal.

5. The undersigned agrees to complete the work within 40 working days or by _____ unless additional time is granted in accordance with the specifications.

6. The successful bidder at the time of execution of the contract will be required to deposit a contract bond for the full amount of the award. When a contract bond is not required, the proposal guaranty check will be held in lieu thereof. If this proposal is accepted and the undersigned fails to execute a contract and contract bond as required, it is hereby agreed that the Bid Bond of check shall be forfeited to the Awarding Authority.

7. Each pay item should have a unit price and a total price. If no total price is shown or if there is a discrepancy between the products of the unit price multiplied by the quantity, the unit price shall govern. If a unit price is omitted, the total price will be divided by the quantity in order to establish a unit price. A bid may be declared unacceptable if neither a unit price nor a total price is shown.

8. The undersigned submits herewith the schedule of prices on BLR 12201 covering the work to be performed under this contract.

9. The undersigned further agrees that if awarded the contract for the sections contained in the combinations on BLR 12201, the work shall be in accordance with the requirements of each individual proposal for the multiple bid specified in the Schedule for Multiple Bids below.

10. A proposal guaranty in the proper amount, as specified in BLRS Special Provision for Bidding Requirements and Conditions for Contract Proposals, will be required. Bid Bonds will be allowed as a proposal guaranty. Accompanying this proposal is either a bid bond, if allowed, on Department form BLR 12230 or a proposal guaranty check, complying with the specifications, made payable to: Tazewell County Treasurer of _____.
The amount of the check is _____ (_____).

Attach Cashier's Check or Certified Check Here

In the event that one proposal guaranty check is intended to cover two or more bid proposals, the amount must be equal to the sum of the proposal guaranties which would be required for each individual bid proposal. If the proposal guaranty check is placed in another bid proposal, state below where it may be found.

The proposal guaranty check will be found in the bid proposal for: Section Number 17-10135-00-BR .

Local Public Agency	County	Section Number	Route(s) (Street/Road Name)
Hopedale Township Road Distric	Tazewell	17-10135-00-BR	FAS 1774 (Prairie Road)

CONTRACTOR CERTIFICATIONS

The certifications hereinafter made by the bidder are each a material representation of fact upon which reliance is placed should the Department enter into the contract with the bidder.

1. **Debt Delinquency.** The bidder or contractor or subcontractor, respectively, certifies that it is not delinquent in the payment of any tax administered by the Department of Revenue unless the individual or other entity is contesting, in accordance with the procedure established by the appropriate Revenue Act, its liability for the tax or the amount of the tax. Making a false statement voids the contract and allows the Department to recover all amounts paid to the individual or entity under the contract in a civil action.

2. **Bid-Rigging or Bid Rotating**. The bidder or contractor or subcontractor, respectively, certifies that it is not barred from contracting with the Department by reason of a violation of either 720 ILCS 5/33E-3 or 720 ILCS 5/33E-4.

   A violation of section 33E-3 would be represented by a conviction of the crime of bid-rigging which, in addition to Class 3 felony sentencing, provides that any person convicted of this offense, or any similar offense of any state or the United States which contains the same elements as this offense shall be barred for 5 years from the date of conviction from contracting with any unit of State or local government. No corporation shall be barred from contracting with any unit of State or local government as a result of a conviction under this Section of any employee or agent of such corporation if the employee so convicted is no longer employed by the corporation: (1) it has been finally adjudicated not guilty or (2) if it demonstrates to the governmental entity with which it seeks to contract that entity finds that the commission of the offense was neither authorized, requested, commanded, nor performed by a director, officer or a high managerial agent on behalf of the corporation.

   A violation of Section 33E-4 would be represented by a conviction of the crime of bid-rotating which, in addition to Class 2 felony sentencing, provides that any person convicted of this offense or any similar offense of any state or the United States which contains the same elements as this offense shall be permanently barred from contracting with any unit of State of Local government. No corporation shall be barred from contracting with any unit of State or Local government as a result of a conviction under this Section of any employee or agent of such corporation if the employee so convicted is no longer employed by the corporation and: (1) it has been finally adjudicated not guilty or (2) if it demonstrates to the governmental entity with which it seeks to contract and that entity finds that the commission of the offense was neither authorized, requested, commanded, nor performed by a director, officer or a high managerial agent on behalf of the corporation.

3. **Bribery.** The bidder or contractor or subcontractor, respectively, certifies that, it has not been convicted of bribery or attempting to bribe an officer or employee of the State of Illinois or any unit of local government, nor has the firm made an admission of guilt of such conduct which is a matter or record, nor has an official, agent, or employee of the firm committed bribery or attempted bribery on behalf of the firm and pursuant to the direction or authorization of a responsible official of the firm.

4. **Interim Suspension or Suspension.** The bidder or contractor or subcontractor, respectively, certifies that it is not currently under a suspension as defined in Subpart I of Title 44 Subtitle A Chapter III Part 6 of the Illinois Administrative code. Furthermore, if suspended prior to completion of this work, the contract or contracts executed for the completion of this work may be canceled.

Local Public Agency	County	Section Number	Route(s) (Street/Road Name)
Hopedale Township Road District	Tazewell	17-10135-00-BR	FAS 1774 (Prairie Road)

SIGNATURES

(If an individual)

Signature of Bidder | Date

Business Address

City | State | Zip Code

(If a partnership)

Firm Name

Signature | Date

Title

Business Address

City | State | Zip Code

Insert the Names and Addresses of all Partners

(If a corporation)

Corporate Name

Signature | Date

Title

Business Address

City | State | Zip Code

Insert Names of Officers

President

Secretary

Attest:

Secretary

Treasurer

Illinois Department of Transportation

Schedule of Prices

Contractor's Name

Contractor's Address | City | State | Zip Code

Local Public Agency | County | Section Number

Hopedale Township Road District | Tazewell | 17-10135-00-BR

Route(s) (Street/Road Name)

FAS 1774 (Prairie Road)

Schedule for Multiple Bids

Combination Letter	Section Included in Combinations	Total

Schedule for Single Bid

(For complete information covering these items, see plans and specifications.)

Item Number	Items	Unit	Quantity	Unit Price	Total
20100500	TREE REMOVAL, ACRES	ACRE	0.1		
20200100	EARTH EXCAVATION	CU YD	122		
20300100	CHANNEL EXCAVATION	CU YD	380		
28000250	TEMP EROS CONTR SEED	POUND	100		
28000400	PERIMETER EROS BAR	FOOT	745		
28100105	STONE RIPRAP, CLASS A3	SQ YD	207		
28100109	STONE RIPRAP, CLASS A5	SQ YD	682		
28200200	FILTER FABRIC	SQ YD	682		
40200800	AGG SURF CSE B	TON	39		
40300200	BIT MATLS PR CT	TON	1.2		
40300400	BIT MATLS C&S CT	TON	2.0		
40300500	COVER COAT AGGREGATE	TON	20		
40300600	SEAL COAT AGGREGATE	TON	10		
44000400	GUTTER REMOVAL	FOOT	179		
44201717	CL D PATCH T2 6	SQ YD	52		
48101200	AGGREGATE SHLDS B	TON	71		
50100100	REM EXIST STRUCT	EACH	1		
50200100	STRUCTURE EXCAVATION	CU YD	94		
50300225	CONCRETE STRUCTURES	CU YD	31.8		
50400605	P P CONC DK BM 33 DP	SQ FT	2128		
50800205	REINF BARS, EPOXY CTD	POUND	4760		
50900205	STEEL RAILING, TYPE S1	FOOT	152		
51200959	FUR M S PILE 14X0.312	FOOT	280		
51202305	DRIVING PILES	FOOT	280		
51203200	TEST PILE METAL SHELLS	EACH	2		

Local Public Agency	County	Section Number	Route(s) (Street/Road Name)
Hopedale Township Road District	Tazewell	17-10135-00-BR	FAS 1774 (Prairie Road)

Item Number	Items	Unit	Quantity	Unit Price	Total
51204650	PILE SHOES	EACH	10		
51500100	NAME PLATES	EACH	1		
59300100	CONTR LOW-STRENG MATL	CU YD	62.2		
60600095	CLASS SI CONC OUTLET	CU YD	8.0		
60602800	CONCRETE GUTTER, TYPE B	FOOT	80		
63000001	SPBGR TY A 6FT POSTS	FOOT	13		
63100075	TRAF BAR TERM T5A	EACH	4		
63100167	TR BAR TRM T1 SPL TAN	EACH	3		
72501000	TERMINAL MARKER - DA	EACH	4		
X0326440	SURF REM VAR DP (SPL)	SQ YD	682		
X2501000	SEEDING, CLASS 2 (SPECIA	ACRE	0.25		
X6310176	TRAF BAR TERM T2 SPL	EACH	1		
X7011800	TRAF CONT-PROT BLR 21	L SUM	1		
Z0013798	CONSTRUCTION LAYOUT	L SUM	1		
				Bidder's Total Proposal	

1. Each pay item should have a unit price and a total price.
2. If no total price is shown or if there is a discrepancy between the product of the unit price multiplied by the quantity, the unit price shall govern.
3. If a unit price is omitted, the total price will be divided by the quantity in order to establish a unit price.
4. A bid may be declared unacceptable if neither a unit price or total price is shown.

Illinois Department of Transportation

Local Public Agency
Proposal Bid Bond

Local Public Agency	County	Section Number
Hopedale Township Road District	Tazewell	17-10135-00-BR

WE, _____ as PRINCIPAL, and

_____ as SURETY, are held jointly, severally and firmly bound unto the above Local Public Agency (hereafter referred to as "LPA") in the penal sum of 5% of the total bid price, or for the amount specified in the proposal documents in effect on the date of invitation for bids, whichever is the lesser sum. We bind ourselves, our heirs, executors, administrators, successors, and assigns, jointly pay to the LPA this sum under the conditions of this instrument.

WHEREAS THE CONDITION OF THE FOREGOING OBLIGATION IS SUCH that, the said PRINCIPAL is submitting a written proposal to the LPA acting through its awarding authority for the construction of the work designated as the above section.

THEREFORE if the proposal is accepted and a contract awarded to the PRINCIPAL by the LPA for the above designated section and the PRINCIPAL shall within fifteen (15) days after award enter into a formal contract, furnish surety guaranteeing the faithful performance of the work, and furnish evidence of the required insurance coverage, all as provided in the "Standard Specifications for Road and Bridge Construction" and applicable Supplemental Specifications, then this obligation shall become void; otherwise it shall remain in full force and effect.

IN THE EVENT the LPA determines the PRINCIPAL has failed to enter into a formal contract in compliance with any requirements set forth in the preceding paragraph, then the LPA acting through its awarding authority shall immediately be entitled to recover the full penal sum set out above, together with all court costs, all attorney fees, and any other expense of recovery.

IN TESTIMONY WHEREOF, the said PRINCIPAL and the said SURETY have caused this instrument to be signed by their respective officers this _____ (Day) of _____ (Month and Year)

Principal

Company Name		Company Name	
Signature	Date	Signature	Date
By:		By:	
Title		Title	

(If Principal is a joint venture of two or more contractors, the company names, and authorized signatures of each contractor must be affixed.)

Surety

Name of Surety	Signature of Attorney-in-Fact	Date
	By:	

STATE OF IL

COUNTY OF

I _____ , a Notary Public in and for said county do hereby certify that

_____

(Insert names of individuals signing on behalf of PRINCIPAL & SURETY)

who are each personally known to me to be the same persons whose names are subscribed to the foregoing instrument on behalf of PRINCIPAL and SURETY, appeared before me this day in person and acknowledged respectively, that they signed and delivered said instruments as their free and voluntary act for the uses and purposes therein set forth.

Given under my hand and notarial seal this _____ (Day) day of _____ (Month and Year) .

Notary Public Signature

(SEAL)

Date commission expires _____

Local Public Agency	County	Section Number
Hopedale Township Road District	Tazewell	17-10135-00-BR

ELECTRONIC BID BOND

☐ **Electronic bid bond is allowed (box must be checked by LPA if electronic bid bond is allowed)**

The Principal may submit an electronic bid bond, in lieu of completing the above section of the Proposal Bid Bond Form. By providing an electronic bid bond ID code and signing below, the Principal is ensuring the identified electronic bid bond has been executed and the Principal and Surety are firmly bound unto the LPA under the conditions of the bid bond as shown above. (If PRINCIPAL is a joint venture of two or more contractors, an electronic bid bond ID code, company/Bidder name title and date must be affixed for each contractor in the venture.)

Electronic Bid Bond ID Code

Company/Bidder Name

Signature

Date

Title

Illinois Department of Transportation

Apprenticeship and Training Program Certification

Local Public Agency	County	Street Name/Road Name	Section Number
Hopedale Township Road District	Tazewell	FAS 1774 (Prairie Road)	17-10135-00-BR

All contractors are required to complete the following certification

☒ For this contract proposal or for all bidding groups in this deliver and install proposal.

☐ For the following deliver and install bidding groups in this material proposal.

Illinois Department of Transportation policy, adopted in accordance with the provisions of the Illinois Highway Code, requires this contract to be awarded to the lowest responsive and responsible bidder. The award decision is subject to approval by the Department. In addition to all other responsibility factors, this contract or deliver and install proposal requires all bidders and all bidder's subcontractors to disclose participation in apprenticeship or training programs that are (1) approved by and registered with the United States Department of Labor's Bureau of Apprenticeship and Training, and (2) applicable to the work of the above indicated proposals or groups. Therefore, all bidders are required to complete the following certification:

1. Except as provided in paragraph 4 below, the undersigned bidder certifies that it is a participant, either as an individual or as part of a group program, in an approved apprenticeship or training program applicable to each type of work or craft that the bidder will perform with its own employees.

2. The undersigned bidder further certifies, for work to be performed by subcontract, that each of its subcontractors either (A) is, at the time of such bid, participating in an approved, applicable apprenticeship or training program; or (B) will, prior to commencement of performance of work pursuant to this contract, establish participation in an approved apprenticeship or training program applicable to the work of the subcontract.

3. The undersigned bidder, by inclusion in the list in the space below, certifies the official name of each program sponsor holding the Certificate of Registration for all of the types of work or crafts in which the bidder is a participant and that will be performed with the bidder's employees. Types of work or craft that will be subcontracted shall be included and listed as subcontract work. The list shall also indicate any type of work or craft job category for which there is no applicable apprenticeship or training program available.

4. Except for any work identified above, if any bidder or subcontractor shall perform all or part of the work of the contract or deliver and install proposal solely by individual owners, partners or members and not by employees to whom the payment of prevailing rates of wages would be required, check the following box, and identify the owner/operator workforces and positions of ownership. ☐

The requirements of this certification and disclosure are a material part of the contract, and the contractor shall require this certification provision to be included in all approved subcontracts. The bidder is responsible for making a complete report and shall make certain that each type of work or craft job category that will be utilized on the project is accounted for and listed. The Department at any time before or afterward may require the production of a copy of each applicable Certificate of Registration issued by the United States Department of Labor evidencing such participation by the contractor and any or all of its subcontractors. In order to fulfill the participation requirement, it shall not be necessary that any applicable program sponsor be currently taking or that it will take applications for apprenticeship, training or employment during the performance of the work of this contract or deliver and install proposal.

Bidder

Signature

Date

Title

Address

City

State

Zip Code

Illinois Department of Transportation

Affidavit of Illinois Business Office

Local Public Agency	County	Street Name/Road Name	Section Number
Hopedale Township Road District	Tazewell	FAS 1774 (Prairie Road)	17-10135-00-BR

I, _____ of _____ , _____ ,
Name of Affiant City of Affiant State of Affiant
being first duly sworn upon oath, state as follows:

1. That I am the _____ of _____ .
Officer or Position Bidder

2. That I have personal knowledge of the facts herein stated.

3. That, if selected under the proposal described above, _____ , will maintain a business office in the
Bidder
State of Illinois, which will be located in _____ County, Illinois.
County

4. That this business office will serve as the primary place of employment for any persons employed in the construction contemplated by this proposal.

5. That this Affidavit is given as a requirement of state law as provided in Section 30-22(8) of the Illinois Procurement Code.

Signature | Date

Print Name of Affiant

Notary Public

State of IL

County _____

Signed (or subscribed or attested) before me on _____ by
(date)

_____ , authorized agent(s) of
(name/s of person/s)

_____ .
Bidder

Signature of Notary Public

(SEAL)

My commission expires _____

Illinois Department of Transportation

Affidavit of Availability

For the Letting of

Bureau of Construction
2300 South Dirksen Parkway/Room 322
Springfield, IL 62764

Instructions: Complete this form by either typing or using black ink. "Authorization to Bid" will not be issued unless both sides of this form are completed in detail. Use additional forms as needed to list all work.

Part I. Work Under Contract

List below all work you have under contract as either a prime contractor or a subcontractor. It is required to include all pending low bids not yet awarded or rejected. In a joint venture, list only that portion of the work which is the responsibility of your company. The uncompleted dollar value is to be based upon the most recent engineer's or owners estimate, and must include work subcontracted to others. If no work is contracted, show NONE.

	1	2	3	4	Awards Pending	Accumulated Totals
Contract Number						
Contract With						
Estimated Completion Date						
Total Contract Price						
Uncompleted Dollar Value if Firm is the Prime Contractor						
Uncompleted Dollar Value if Firm is the Subcontractor						
					Total Value of All Work	

Part II. Awards Pending and Uncompleted Work to be done with your own forces.

List below the uncompleted dollar value of work for each contract and awards pending to be completed with your own forces. All work subcontracted to others will be listed on the reverse of this form. In a joint venture, list only that portion of the work to be done by your company. If no work is contracted, show NONE.

Earthwork						
Portland Cement Concrete Paving						
HMA Plant Mix						
HMA Paving						
Clean & Seal Cracks/Joints						
Aggregate Bases, Surfaces						
Highway, R.R., Waterway Struc.						
Drainage						
Electrical						
Cover and Seal Coats						
Concrete Construction						
Landscaping						
Fencing						
Guardrail						
Painting						
Signing						
Cold Milling, Planning, Rotomilling						
Demolition						
Pavement Markings (Paint)						
Other Construction (List)						
Totals						

Disclosure of this information is REQUIRED to accomplish the statutory purpose as outlined in the “Illinois Procurement Code." Failure to comply will result in non-issuance of an "Authorization To Bid." This form has been approved by the State Forms Management Center.

Part III. Work Subcontracted to Others.

For each contract described in Part I, list all the work you have subcontracted to others.

	1	2	3	4	Awards Pending
Subcontractor					
Type of Work					
Subcontract Price					
Amount Uncompleted					
Subcontractor					
Type of Work					
Subcontract Price					
Amount Uncompleted					
Subcontractor					
Type of Work					
Subcontract Price					
Amount Uncompleted					
Subcontractor					
Type of Work					
Subcontract Price					
Amount Uncompleted					
Subcontractor					
Type of Work					
Subcontract Price					
Amount Uncompleted					
Total Uncompleted					

Notary

I, being duly sworn, do hereby declare this affidavit is a true and correct statement relating to ALL uncompleted contracts of the undersigned for Federal, State, County, City and private work, including ALL subcontract work, ALL pending low bids not yet awarded or rejected and ALL estimated completion dates.

Officer or Director

Title

Signature

Date

Company

Address

City

State

Zip Code

Subscribed and sworn to before me

this _____ day of _____ , _____

_____

(Signature of Notary Public)

My commission expires _____

(Notary Seal)

☐ Add pages for additional contracts

INDEX
FOR
SUPPLEMENTAL SPECIFICATIONS
AND RECURRING SPECIAL PROVISIONS

Adopted January 1, 2021

This index contains a listing of SUPPLEMENTAL SPECIFICATIONS and frequently used RECURRING SPECIAL PROVISIONS.

ERRATA Standard Specifications for Road and Bridge Construction (Adopted 4-1-16) (Revised 1-1-21)

SUPPLEMENTAL SPECIFICATIONS

Std. Spec. Sec.		Page No.
106	Control of Materials	1
107	Legal Regulations and Responsibility to Public	2
109	Measurement and Payment	3
205	Embankment	4
403	Bituminous Surface Treatment (Class A-1, A-2, A-3)	5
404	Micro-Surfacing and Slurry Sealing	6
405	Cape Seal	17
406	Hot-Mix Asphalt Binder and Surface Course	27
420	Portland Cement Concrete Pavement	28
424	Portland Cement Concrete Sidewalk	30
442	Pavement Patching	31
502	Excavation for Structures	32
503	Concrete Structures	35
504	Precast Concrete Structures	38
505	Steel Structures	40
506	Cleaning and Painting New Steel Structures	41
511	Slope Wall ……	42
522	Retaining Walls	44
542	Pipe Culverts	45
586	Sand Backfill for Vaulted Abutments	46
602	Catch Basin, Manhole, Inlet, Drainage Structure, and Valve Vault Construction, Adjustment, and Reconstruction	48
603	Adjusting Frames and Grates of Drainage and Utility Structures	49
630	Steel Plate Beam Guardrail	50
631	Traffic Barrier Terminals	53
670	Engineer's Field Office and Laboratory	54
701	Work Zone Traffic Control and Protection	55
704	Temporary Concrete Barrier	58
780	Pavement Striping	60
781	Raised Reflective Pavement Markers	61
783	Pavement Marking and Marker Removal	62
888	Pedestrian Push-Button	64
1001	Cement	65
1003	Fine Aggregates	66
1004	Coarse Aggregates	67
1006	Metals	70
1008	Structural Steel Coatings	73
1020	Portland Cement Concrete	77
1043	Adjusting Rings	79
1050	Poured Joint Sealers	81
1069	Pole and Tower	83
1077	Post and Foundation	84
1083	Elastomeric Bearings	85
1095	Pavement Markings	86
1096	Pavement Markers	87
1101	General Equipment	88
1102	Hot-Mix Asphalt Equipment	89
1103	Portland Cement Concrete Equipment	91
1105	Pavement Marking Equipment	93
1106	Work Zone Traffic Control Devices	95

Illinois Department of Transportation

Check Sheet for Recurring Special Provisions

Local Public Agency	County	Section Number
Hopedale Road District, Tazewell County	Tazewell	17-10135-00-BR

☐ **Check this box for lettings prior to 01/01/2021.**

The Following Recurring Special Provisions Indicated By An "X" Are Applicable To This Contract And Are Included By Reference:

Recurring Special Provisions

Check Sheet #			Page No.
1	☐	Additional State Requirements for Federal-Aid Construction Contracts	97
2	☐	Subletting of Contracts (Federal-Aid Contracts)	100
3	☐	EEO	101
4	☐	Specific EEO Responsibilities Non Federal-Aid Contracts	111
5	☐	Required Provisions - State Contracts	116
6	☐	Asbestos Bearing Pad Removal	122
7	☐	Asbestos Waterproofing Membrane and Asbestos HMA Surface Removal	123
8	☒	Temporary Stream Crossings and In-Stream Work Pads	124
9	☐	Construction Layout Stakes Except for Bridges	125
10	☒	Construction Layout Stakes	128
11	☐	Use of Geotextile Fabric for Railroad Crossing	131
12	☐	Subsealing of Concrete Pavements	133
13	☐	Hot-Mix Asphalt Surface Correction	137
14	☐	Pavement and Shoulder Resurfacing	139
15	☐	Patching with Hot-Mix Asphalt Overlay Removal	140
16	☐	Polymer Concrete	142
17	☐	PVC Pipeliner	144
18	☐	Bicycle Racks	145
19	☐	Temporary Portable Bridge Traffic Signals	147
20		**Reserved**	149
21	☐	Nighttime Inspection of Roadway Lighting	150
22	☐	English Substitution of Metric Bolts	151
23	☐	Calcium Chloride Accelerator for Portland Cement Concrete	152
24	☐	Quality Control of Concrete Mixtures at the Plant	153
25	☒	Quality Control/Quality Assurance of Concrete Mixtures	161
26	☐	Digital Terrain Modeling for Earthwork Calculations	177
27		**Reserved**	179
28	☐	Preventive Maintenance - Bituminous Surface Treatment (A-1)	180
29		**Reserved**	186
30		**Reserved**	187
31		**Reserved**	188
32	☐	Temporary Raised Pavement Markers	189
33	☐	Restoring Bridge Approach Pavements Using High-Density Foam	190
34	☐	Portland Cement Concrete Inlay or Overlay	193
35	☐	Portland Cement Concrete Partial Depth Hot-Mix Asphalt Patching	197
36	☐	Longitudinal Joint and Crack Patching	200
37	☐	Concrete Mix Design - Department Provided	202

Local Public Agency	County	Section Number
Hopedale Road District, Tazewell County	Tazewell	17-10135-00-BR

The Following Local Roads And Streets Recurring Special Provisions Indicated By An "X" Are Applicable To This Contract And Are Included By Reference:

Local Roads And Streets Recurring Special Provisions

Check Sheet #			Page No.
LRS 1		**Reserved**	204
LRS 2	☐	Furnished Excavation	205
LRS 3	☒	Work Zone Traffic Control Surveillance	206
LRS 4	☒	Flaggers in Work Zones	207
LRS 5	☒	Contract Claims	208
LRS 6	☒	Bidding Requirements and Conditions for Contract Proposals	209
LRS 7	☐	Bidding Requirements and Conditions for Material Proposals	215
LRS 8		**Reserved**	221
LRS 9	☐	Bituminous Surface Treatments	222
LRS 10		**Reserved**	223
LRS 11	☒	Employment Practices	224
LRS 12	☒	Wages of Employees on Public Works	226
LRS 13	☒	Selection of Labor	228
LRS 14	☐	Paving Brick and Concrete Paver Pavements and Sidewalks	229
LRS 15	☒	Partial Payments	232
LRS 16	☐	Protests on Local Lettings	233
LRS 17	☒	Substance Abuse Prevention Program	234
LRS 18	☐	Multigrade Cold Mix Asphalt	235

SPECIAL PROVISIONS TABLE OF CONTENTS

CONTRACT SPECIFICATIONS 1
DESCRIPTION OF WORK 1
PREQUALIFICATION OF BIDDERS 1
PREVAILING WAGE 1
PROJECT MAINTENANCE 2
CONTRACTOR AVAILABILITY 2
CONTRACTOR RESPONSIBILITY 2
UTILITIES 2
STATUS OF UTILITIES 3
PROTECTION AND RESTORATION OF TRAFFIC SIGNS 3
REMOVAL OF EXISTING STRUCTURES 4
TEMPORARY STREAM CROSSING 4
REMOVAL OF UNCLASSIFIED MATERIALS 4
SEEDING, CLASS 2 (SPECIAL) 5
MEASUREMENTS OF GRANULAR MATERIALS 5
TRAFFIC CONTROL PLAN 6
STANDARDS IN THE PLANS 6
RIGHT-OF-WAY 6
SHOP DRAWINGS 7
SURFACE REMOVAL, VARIABLE DEPTH (SPECIAL) 7
TRAFFIC BARRIER TERMINAL, TYPE 2 (SPECIAL) 8
EMBANKMENT (RESTRICTIONS) 8
EMBANKMENT (SMALL EMBANKMENT) 9
PCC AUTOMATIC BATCHING EQUIPMENT 9
PCC QC/QA ELECTRONIC REPORTS SUBMITTAL 10
INSURANCE LR 107-4
CONSTRUCTION AND MAINTENANCE SIGNS LR 702

SPECIAL PROVISIONS

CONTRACT SPECIFICATIONS

The following Special Provisions supplement the "Standard Specifications for Road and Bridge Construction", adopted April 1, 2016; the latest edition of the "Illinois Manual of Uniform Traffic Control Devices for Streets and Highways" and the “Manual of Test Procedures for Materials” in effect on the date of invitation for bids, and the Supplemental Specifications adopted January 1, 2021 and the Recurring Special Provisions indicated on the Check Sheet included herein which apply to and govern the construction of FAS 1774 (Prairie Rd.) over Indian Creek in Tazewell County, Section 17-10135-00-BR, and in case of conflict with any part, or parts, of said specifications, the Special Provisions shall take precedence and shall govern.

DESCRIPTION OF WORK

The work included in this contract consists of: (1) The complete removal of the existing single-span reinforced concrete tee beam bridge and replacement with a single-span PPC deck beam bridge, (2) A-3 surface on an existing concrete pavement, (3) riprap with filter fabric and (4) seeding and other collateral work necessary to complete the improvement in accordance with the plans and as specified herein.

PREQUALIFICATION OF BIDDERS

Each prospective bidder shall be prequalified with the Illinois Department of Transportation.

PREVAILING WAGE

This contract calls for the construction of a “public work”, within the meaning of the Illinois Prevailing Wage Act, 820 ILCS 130/.01 et seq. (“the Act”). The Act requires contractors and subcontractor to pay laborers, workers and mechanics performing services on public works projects no less than the current “prevailing rate of wages” (hourly cash wages plus amount for fringe benefits) in the county where the work is performed.

For information regarding current prevailing wage rates, please refer to the Illinois Department of Labor (IDOL) website at https://www2.illinois.gov/idol/Pages/default.aspx.

The Illinois Department of Labor revises the prevailing wage rates and the contractor/subcontractor has an obligation to check the Department’s web site for revisions to prevailing wage rates.

PROJECT MAINTENANCE

Should the County determine that an unsafe condition exists within the scope of this project; the County will attempt to contact the Contractor to resolve the unsafe condition. However, if the County is unable to contact the Contractor's designated representative or if the Contractor fails to respond within a four (4) hour period, the County may perform the necessary operations and the cost for time and materials will be deducted from the contract.

CONTRACTOR AVAILABILITY

At all times when work is being performed (by Contractor or subcontractor), the prime Contractor shall have on the job site someone in his/her direct employ who is capable of meeting with the Engineer and making decisions. If authorized by the Engineer, this condition may be satisfied by having a telephone number of someone who satisfies the above requirements.

CONTRACTOR RESPONSIBILITY

The contract plans indicate the location and elevations of the proposed work. Minor changes in the locations and elevations may be directed by the Engineer. Minor changes requested by the Engineer will be made without additional compensation to the Contractor.

Any inconveniences, delays or additional expenses incurred by the Contractor in complying with Special Provisions shall not be a basis for additional payment and shall be considered included in the contract.

UTILITIES

The Contractor shall take all precautions necessary to protect the property of the various public and private utilities which may be located underground or above ground, at or adjacent to the site of this improvement. The Contractor shall repair or replace at his/her own expense, or bear the cost to repair or replace, any utility property that has been damaged through his/her actions. The procedures and specifications of repair will be in accordance with the regulation of and/or policy of the affected utility.

The adjustment and/or relocation of the private utilities will be the responsibility of the utility companies involved. It is possible that such adjustments may be underway during the construction of this contract. In such an event, the Contractor shall cooperate with the various agencies involved in accordance with Article 105.07 of the Standard Specifications.

The Contractor's attention is directed to the fact that there exists within the State of Illinois Joint Utility Locating Information for Excavators (J.U.L.I.E.) System. All utility companies and municipalities, which have gas mains, and a number of others, are a part of this system.

The Contractor shall contact the Joint Utility Locating Information for Excavators System (J.U.L.I.E.) (800) 892-0123 a minimum of forty-eight hours in advance of any excavation work. The political

name of the township where the work is located, as shown on the cover sheet, along with other location information such as the land section and quarter section will be required by J.U.L.I.E. at the time of the call.

It is understood and agreed the Contractor has considered in his bid all the permanent and temporary utility appurtenances in their present or relocated positions.

STATUS OF UTILITIES

Name and Contact of Utility	Type	Location	Estimated Date Relocation Complete
CORN BELT ENERGY CORPORATION PHONE: (309)-662-5330 CONTACT: ENGINEERING DEPARTMENT JULIE@CORNBELTENERGY.COM	Electric / Power	N/A	Not Anticipated
CENTURYLINK PHONE: (877)-366-8344 EXT. 2 NETWORK RELOCATIONS NATIONALRELO@CENTURYLINK.COM	Telephone	N/A	Not Anticipated
J.U.L.I.E. 1-800-892-0123			

The above represents the best information of the Department and is included solely for the convenience of the bidder. The applicable provisions of Articles 105.07 and 107.20 of the Standard Specifications for Road and Bridge Construction shall apply.

The Contractor should notify the Engineer, in writing, of any utility adjustment or removal, which has not been completed as required for the Contractor's operations. A request, for an extension of time only, will be considered to the extent the Contractor's operations were affected.

PROTECTION AND RESTORATION OF TRAFFIC SIGNS

The work of this item shall be performed in accordance with Article 107.25 of the Standard Specifications and the following provisions:

Replace the second sentence in the second paragraph with the following:

Signs that are not to be re-erected shall become the property of Hopedale Township Road District and shall be stored in a secure location on the jobsite for removal by Township / County forces.

REMOVAL OF EXISTING STRUCTURES

The work for this item shall be performed in accordance with Section 501 of the Standard Specifications and as directed by the Engineer.

The existing structure to be removed consists of: single-span, RC tee beam bridge on poured concrete closed abutments and wings. Removal of the existing structure shall include removal of all attached guardrail, signs and appurtenances. Excavation of earth necessary to perform the removal of existing structures will not be measured for payment. Backfilling shall consist of placing and compacting the necessary fill within the space excavated for a structure below the ground surface, as it existed before any excavation was made. Any fill necessary to fill a void from removal of existing structure shall be placed according to Article 502.10 and shall be considered included in the unit price for REMOVAL OF EXISTING STRUCTURES. No additional compensation will be allowed because of variation from the assumed thickness or dimensions shown on the plans.

The existing structures shall be disposed of by the Contractor, in accordance with all applicable State and Federal laws and at a site outside the Right-of-Way in accordance with Section 501 of the Standard Specifications.

The work for this item, including excavation and utility coordination, will not be paid for separately but shall be considered as included in the contract unit price per EACH for REMOVAL OF EXISTING STRUCTURES and no additional compensation will be allowed.

TEMPORARY STREAM CROSSING

Should the Contractor elect to construct a temporary stream crossing of any nature, the Contractor shall adhere to all applicable permit and certificate requirements and conditions as well as the conditions contained in Check Sheet Item 8 of the Illinois Department of Transportation Supplemental Specifications and Recurring Special Provisions adopted January 1, 2021.

No additional time will be allowed under the contract for the work of this item.

This work will not be paid for separately but shall be considered as included in the contract unit prices of the various pay items in the contract.

REMOVAL OF UNCLASSIFIED MATERIALS

Unclassified materials shall be removed at the locations shown on the plans or designated by the Engineer. The removed materials shall be disposed of outside the Right-Of-Way in accordance with Article 202.03 of the Standard Specifications and as directed by the Engineer.

This work will not be paid for separately but shall be considered as included in the contract unit price per CUBIC YARD for EARTH EXCAVATION.

SEEDING, CLASS 2 (SPECIAL)

The work shall be performed in accordance with Section 250 and 251 of the Standard Specifications and the following provisions.

Replace the third paragraph of Article 250.04 with the following:

"Fertilizer nutrients shall be applied at a rate of 270 lb of actual fertilizer nutrients per acre. The fertilizer shall be applied at the rate of 1:1:1 as follows:

Nitrogen Fertilizer Nutrients	90 lb/Ac
Phosphorus Fertilizer Nutrients	90 lb/Ac
Potassium Fertilizer Nutrients	90 lb/Ac

Revise the first sentence of the first paragraph of Article 1081.08 to read as follows:

"The fertilizer furnished shall be a ready mixed material having a ratio of (1-1-1)."

Revise the sixth sentence of the first paragraph of Article 250.06 to read as follows:

"When seed or fertilizer is applied with a hydraulic seeder the rate of application shall not be less than 570 gallons of slurry per acre."

Under Article 250.07 – Seeding Mixtures

For the purpose of this contract, no seeding will be permitted when the ground is frozen, wet or in any otherwise untillable condition.

Mulching seeded areas shall be performed in accordance with Article 251.03 (b) Method 2.

Revise Articles 250.10 and 251.06 so that the following applies:

This work shall be paid for at the contract unit price per acre for SEEDING, CLASS 2 (SPECIAL). The items of Mulch and Fertilizer Nutrients will not be paid for separately but shall be considered as included to the contract unit price per acre for SEEDING CLASS 2 (SPECIAL).

MEASUREMENTS OF GRANULAR MATERIALS

When any granular material is to be measured in tons in the plans or specifications, it will be mandatory for the Contractor to furnish truck scale tickets. All granular materials shall be weighed on certified scales.

Any costs incurred due to furnishing approved scales and weighing the various aggregates as described herein will not be paid for separately, but shall be considered as included in the contract unit price per ton for the various items in which the granular material is incorporated.

TRAFFIC CONTROL PLAN

Traffic Control shall be in accordance with the applicable sections of the Standard Specifications for Road and Bridge Construction, the applicable guidelines contained in the Illinois Manual on Uniform Traffic Control Devices for Streets and Highways, these special provisions, and any special details and Highway Standards contained herein and in the plans. Layout and maintenance of the traffic control devices shall be the responsibility of the Contractor. The appropriate traffic control devices shall be utilized for the various construction activities being performed by the Contractor.

Special attention is called to Articles 107.09 and 107.14 and Section 701 of the Standard Specifications for Road and Bridge Construction, other special provisions relating to traffic control and the following Highway Standards:

Standard 701901
Standard BLR-21

FAS 1774 (Prairie Rd.) shall be closed to all traffic at the north and south project limits. Local residents shall be allowed access in accordance with the provisions of Articles 107.09 and 107.14 of the Standard Specifications.

All advance warning signs shall be in new or like new condition at the start of the project.

The contractor shall be responsible for the condition and placement of traffic control devices at all times during construction activities and throughout shutdown periods.

Type III barricades conforming to Standard 701901 shall be erected pursuant to Standard BLR 21 and shall extend from shoulder break to shoulder break at the construction limits of the closed area as directed by the Engineer except that two (2) Type A Flashing Lights shall be located above each Type III barricade. Advance warning signs conforming to Standard 701901 shall be erected pursuant to Standard BLR 21 as directed by the Engineer except that One (1) Type A Flashing Light shall be located above each advance warning sign.

The Contractor shall be responsible for preventing public use of any temporary low water crossings.

This work will not be paid for separately but shall be considered in the contract unit price, LUMP SUM, for TRAFFIC CONTROL AND PROTECTION, STANDARD, BLR 21, which includes all labor, equipment and materials necessary to perform the work for the duration of the project.

STANDARDS IN THE PLANS

The standards with revision number listed on the cover sheet of the Plans shall hold precedence over revision numbers listed in these Special Provisions.

RIGHT-OF-WAY

Any fences, enclosures, buildings or other structures on the existing right-of-way shall be removed

by the Contractor, as directed by the Engineer, and disposed of by the Contractor at his expense unless noted otherwise in the plans. This work shall be considered as included in the contract and no additional compensation shall be allowed.

If the Engineer directs the Contractor to construct any temporary or permanent fences or enclosures, the work shall be performed by agreed unit price or extra work in accordance with Article 109.04 of the Standard Specifications.

SHOP DRAWINGS

The Contractor shall be required to submit shop drawings to the Engineer in accordance with Section 105.04 of the Standard Specifications. The Contractor shall also concurrently submit two sets of shop drawings to WHKS & Co., 3695 6th Street Frontage Road West, Suite A, Springfield, IL 62703 for preliminary review. Shop drawings will be reviewed and returned to the Contractor. The Contractor shall have nine (9) sets of corrected shop drawings submitted for final review. Eight (8) sets of the final reviewed shop drawings will be returned to the Contractor for distribution. The Contractor shall be responsible for the final distribution of the reviewed shop drawings in accordance with the Standard Specifications. Any work completed or materials ordered prior to the final approval of such shop drawings shall be at the Contractor's own risk. The cost of this work shall be considered as included with the contract.

SURFACE REMOVAL, VARIABLE DEPTH (SPECIAL)

This work shall consist of the removal and satisfactory disposal of oil and chip surface or HMA surface from the existing pavement and gutters widening as shown on the plans or as directed by the Engineer. Work shall be in accordance with the applicable portions of Sections 440 and 1101 of the Standard Specifications.

The existing surface shall be removed to the variable depth as shown on the plans or as directed by the Engineer. The depth of surface removal varies from 1/4" to approximately 1" as required to adjust profiles and cross slopes to final conditions. The surface removal may be accomplished by scraping or milling to establish proper cross slope as shown on the plans. No additional compensation will be made for the variable depth removal. No additional compensation will be made for deviations in actual thickness.

After cold milling or scraping all loose material shall be removed from the roadway. Before the prime coat is placed, the pavement shall be cleaned of all foreign material to the satisfaction of the Engineer.

This cleanup work shall be considered included in the contract unit price per Square Yard for SURFACE REMOVAL, VARIABLE DEPTH (SPECIAL) and no additional compensation will be allowed.

This work will be paid for at the contract unit price per SQUARE YARD for SURFACE REMOVAL, VARIABLE DEPTH (SPECIAL), which price shall include all labor, equipment and

materials necessary to complete the work to the satisfaction of the Engineer. No additional compensation will be allowed for any additional milling required to obtain proper final grade as shown on the plans.

TRAFFIC BARRIER TERMINAL, TYPE 2 (SPECIAL)

The work of this item shall be in accordance with Section 631 of the Standard Specifications at the location shown on the plans and as directed by the Engineer. The Traffic Barrier Terminal, Type 2 shall be shop curved at the radius shown on the plans in accordance with Article 630.04 of the Standard Specifications.

Traffic Barrier Terminal, Type 2 shall be as shown on Standard 630011 except that modifications in to account field conditions shall be made prior to ordering materials.

This work shall be paid for at the contract unit price per EACH for TRAFFIC BARRIER TERMINAL, TYPE 2A (SPECIAL), which price shall include all labor, equipment and materials necessary to complete the work.

EMBANKMENT (RESTRICTIONS)

Effective January 21, 2005 Revised August 3, 2007

Add the following to the requirements of Article 205.04:

Gravel, crushed stone or soils having less than 35% passing the number 200 sieve and other materials as allowed by Article 202.03 of the standard specifications are further restricted. These further restricted materials are also limited to the interior of the embankment and shall have a minimum cover of 3' (1 m) of non-restricted soil (see "Borrow and Furnished Excavation" Special Provision). Alternating layers of further restricted material and cohesive soil will not be permitted. The further restricted materials may only be incorporated into the embankment by using one of the following procedures:

a. The further restricted materials shall be placed in 4” lifts and disked with the underlying lift material until a uniform and homogenous material is formed having more than 35% passing the number 200 sieve.

b. Sand, gravel or crushed stone embankment when placed on the existing ground surface will be drained using a 10' (3 m) by 10' (3 m) French drain consisting of nonwoven geotechnical fabric with 12” (0.3 m) of B-3 riprap. This shall be constructed on both sides of the embankment at the toe of the foreslope spaced 150’ (46 m) apart. At locations requiring a French drain the 3’ (1 m) cohesive cap shall not be installed within the 10' by 10' riprap area. If the Engineer determines that the existing ground is a granular free draining soil, the French drain may be deleted.

c. Sand, gravel or crushed stone embankment when placed on top of a cohesive embankment will be drained with a permanent 4" (100 mm) underdrain system. The

underdrain system shall consist of a longitudinal underdrain on both sides of the embankment and transverse underdrains spaced at 250' (75 m) centers. The underdrain shall consist of a 2' (0.6 m) deep by 1' (0.3 m) wide trench, backfilled with FA4 sand and a 4" (100 mm) diameter underdrain. In addition, both sides of the embankment will have a 6" (150 mm) diameter pipe drain which will drain the underdrain system and outletted into a permanent drainage structure or outletted by a headwall at the toe of the embankment.

The above work will not be paid for separately but shall be included in the cost of EARTH EXCAVATION, FURNISHED EXCAVATION, or BORROW EXCAVATION.

EMBANKMENT (SMALL EMBANKMENT)

Effective October 1, 1999 Revised January 1, 2007

Revised the third paragraph of Article 205.06 of the Standard Specifications to read:

All material used for embankment shall not contain more than 120% of the optimum moisture except for the top 2 ft. (600 mm).

The top 2 ft. (600 mm) of all embankments shall not contain more than 110% of the optimum moisture determined according to AASHTO T99 (Method C). The 110% of optimum moisture limit may be waived in free draining granular material when approved by the Engineer.

PCC AUTOMATIC BATCHING EQUIPMENT

Effective April 23, 2010 Revised November 7, 2014

Portland cement concrete provided shall be produced from batch plants that conform to the requirements of Article 1103.03 (a) and (b) of the Standard Specifications for Road and Bridge Construction. Semi-automatic batching will not be allowed.

In addition, the batching plant shall be a computerized plant interfaced with a printer and shall print actual batch weights and aggregate mixtures, all water added, amount of each admixture or additive per batch, and percentage variance from design. The ticket shall also state the actual water-cement ratio as batched, and the amount of water that can be added to the batch without exceeding the maximum water-cement ratio. Truck delivery tickets will still be required as per Article 1020.11 (a)(7) of the Standard Specifications.

PCC QC/QA ELECTRONIC REPORTS SUBMITTAL

Effective April 26, 2013 Revised: April 26, 2015

The Contractor's QC personnel shall be responsible for electronically submitting PRO and IND MI 654 Air, Slump, Quantity Reports, PRO MI 655 PCC Strength Reports, and MI 504 Field/Lab Gradations to the Department. The format for the electronic submittals will be the PCC QC/QA reporting program, which will be provided by the Department. Microsoft Office 2007 or newer is required for this program which must be provided by the Contractor.

State of Illinois
Department of Transportation
Bureau of Local Roads and Streets

SPECIAL PROVISION FOR INSURANCE

Effective: February 1, 2007
Revised: August 1, 2007

All references to Sections or Articles in this specification shall be construed to mean specific Section or Article of the Standard Specifications for Road and Bridge Construction, adopted by the Department of Transportation.

The Contractor shall name the following entities as additional insured under the Contractor's general liability insurance policy in accordance with Article 107.27:

Tazewell County Highway Department

Hopedale Road District

The entities listed above and their officers, employees, and agents shall be indemnified and held harmless in accordance with Article 107.26.

State of Illinois
Department of Transportation
Bureau of Local Roads and Streets

SPECIAL PROVISION FOR CONSTRUCTION AND MAINTENANCE SIGNS

Effective: January 1, 2004
Revised: June 1, 2007

All references to Sections or Articles in this specification shall be construed to mean a specific Section or Article of the Standard Specifications for Road and Bridge Construction, adopted by the Department of Transportation.

701.14. Signs. Add the following paragraph to Article 701.14:

All warning signs shall have minimum dimensions of 1200 mm x 1200 mm (48" x 48") and have a black legend on a fluorescent orange reflectorized background, meeting, as a minimum, Type AP reflectivity requirements of Table 1091-2 in Article 1091.02.

BDE SPECIAL PROVISIONS
For the January 15 and March 5, 2021 Lettings

The following special provisions indicated by a “check mark” are applicable to this contract and will be included by the Project Coordination and Implementation Section of the BD&E. An * indicates a new or revised special provision for the letting.

	File Name	#		Special Provision Title	Effective	Revised
	80099	1	☐	Accessible Pedestrian Signals (APS)	April 1, 2003	April 1, 2020
	80274	2	☐	Aggregate Subgrade Improvement	April 1, 2012	April 1, 2016
	80192	3	☐	Automated Flagger Assistance Device	Jan. 1, 2008	
	80173	4	☐	Bituminous Materials Cost Adjustments	Nov. 2, 2006	Aug. 1, 2017
	80426	5	☐	Bituminous Surface Treatment with Fog Seal	Jan. 1, 2020	
	80241	6	☐	Bridge Demolition Debris	July 1, 2009	
	5026I	7	☐	Building Removal-Case I (Non-Friable and Friable Asbestos)	Sept. 1, 1990	April 1, 2010
	5048I	8	☐	Building Removal-Case II (Non-Friable Asbestos)	Sept. 1, 1990	April 1, 2010
	5049I	9	☐	Building Removal-Case III (Friable Asbestos)	Sept. 1, 1990	April 1, 2010
	5053I	10	☐	Building Removal-Case IV (No Asbestos)	Sept. 1, 1990	April 1, 2010
*	80425	11	☐	Cape Seal	Jan. 1, 2020	Jan. 1, 2021
	80384	12	■	Compensable Delay Costs	June 2, 2017	April 1, 2019
	80198	13	☐	Completion Date (via calendar days)	April 1, 2008	
	80199	14	☐	Completion Date (via calendar days) Plus Working Days	April 1, 2008	
	80293	15	☐	Concrete Box Culverts with Skews > 30 Degrees and Design Fills ≤ 5 Feet	April 1, 2012	July 1, 2016
	80311	16	☐	Concrete End Sections for Pipe Culverts	Jan. 1, 2013	April 1, 2016
	80261	17	☐	Construction Air Quality – Diesel Retrofit	June 1, 2010	Nov. 1, 2014
	80387	18	☐	Contrast Preformed Plastic Pavement Marking	Nov. 1, 2017	
*	80434	19	☐	Corrugated Plastic Pipe (Culvert and Storm Sewer)	Jan. 1, 2021	
	80029	20	☐	Disadvantaged Business Enterprise Participation	Sept. 1, 2000	March 2, 2019
	80402	21	■	Disposal Fees	Nov. 1, 2018	
	80378	22	☐	Dowel Bar Inserter	Jan. 1, 2017	Jan. 1, 2018
	80421	23	☐	Electric Service Installation	Jan. 1, 2020	
	80415	24	■	Emulsified Asphalts	Aug. 1, 2019	
	80423	25	☐	Engineer’s Field Office and Laboratory	Jan. 1, 2020	
	80229	26	☐	Fuel Cost Adjustment	April 1, 2009	Aug. 1, 2017
	80417	27	☐	Geotechnical Fabric for Pipe Underdrains and French Drains	Nov. 1, 2019	
	80420	28	☐	Geotextile Retaining Walls	Nov. 1, 2019	
*	80433	29	☐	Green Preformed Thermoplastic Pavement Markings	Jan. 1, 2021	
	80304	30	☐	Grooving for Recessed Pavement Markings	Nov. 1, 2012	Nov. 1, 2020
	80422	31	☐	High Tension Cable Median Barrier	Jan. 1, 2020	Nov. 1, 2020
	80416	32	■	Hot-Mix Asphalt – Binder and Surface Course	July 2, 2019	Nov. 1, 2019
	80398	33	☐	Hot-Mix Asphalt – Longitudinal Joint Sealant	Aug. 1, 2018	Nov. 1, 2019
*	80406	34	☐	Hot-Mix Asphalt – Mixture Design Verification and Production (Modified for I-FIT)	Jan. 1, 2019	Jan. 1, 2021
	80347	35	☐	Hot-Mix Asphalt – Pay for Performance Using Percent Within Limits – Jobsite Sampling	Nov. 1, 2014	July 2, 2019
	80383	36	☐	Hot-Mix Asphalt – Quality Control for Performance	April 1, 2017	July 2, 2019
	80411	37	☐	Luminaires, LED	April 1, 2019	
	80393	38	☐	Manholes, Valve Vaults, and Flat Slab Tops	Jan. 1, 2018	March 1, 2019
	80045	39	☐	Material Transfer Device	June 15, 1999	Aug. 1, 2014
	80418	40	☐	Mechanically Stabilized Earth Retaining Walls	Nov. 1, 2019	Nov. 1, 2020
*	80424	41	☐	Micro-Surfacing and Slurry Sealing	Jan. 1, 2020	Jan. 1, 2021
	80428	42	☐	Mobilization	April 1, 2020	
	80412	43	☐	Obstruction Warning Luminaires, LED	Aug. 1, 2019	
	80430	44	■	Portland Cement Concrete – Haul Time	July 1, 2020	
	80359	45	☐	Portland Cement Concrete Bridge Deck Curing	April 1, 2015	Nov. 1, 2019
	80431	46	☐	Portland Cement Concrete Pavement Patching	July 1, 2020	

	80432	47	☐	Portland Cement Concrete Pavement Placement	July 1, 2020	
	80300	48	☐	Preformed Plastic Pavement Marking Type D - Inlaid	April 1, 2012	April 1, 2016
	3426I	49	☐	Railroad Protective Liability Insurance	Dec. 1, 1986	Jan. 1, 2006
	80157	50	☐	Railroad Protective Liability Insurance (5 and 10)	Jan. 1, 2006	
*	80306	51	■	Reclaimed Asphalt Pavement (RAP) and Reclaimed Asphalt Shingles (RAS)	Nov. 1, 2012	Jan. 1, 2021
	80407	52	■	Removal and Disposal of Regulated Substances	Jan. 1, 2019	Jan. 1, 2020
	80419	53	■	Silt Fence, Inlet Filters, Ground Stabilization and Riprap Filter Fabric	Nov. 1, 2019	April 1, 2020
	80395	54	☐	Sloped Metal End Section for Pipe Culverts	Jan. 1, 2018	
	80340	55	☐	Speed Display Trailer	April 2, 2014	Jan. 1, 2017
	80127	56	☐	Steel Cost Adjustment	April 2, 2004	Aug. 1, 2017
	80408	57	■	Steel Plate Beam Guardrail Manufacturing	Jan. 1, 2019	
	80413	58	☐	Structural Timber	Aug. 1, 2019	
	80397	59	☐	Subcontractor and DBE Payment Reporting	April 2, 2018	
	80391	60	■	Subcontractor Mobilization Payments	Nov. 2, 2017	April 1, 2019
*	80435	61	☐	Surface Testing of Pavements – IRI	Jan. 1, 2021	
	80298	62	☐	Temporary Pavement Marking	April 1, 2012	April 1, 2017
	80409	63	■	Traffic Control Devices - Cones	Jan. 1, 2019	
	80410	64	☐	Traffic Spotters	Jan. 1, 2019	
	20338	65	☐	Training Special Provisions	Oct. 15, 1975	
	80318	66	☐	Traversable Pipe Grate for Concrete End Sections	Jan. 1, 2013	Jan. 1, 2018
	80429	67	☐	Ultra-Thin Bonded Wearing Course	April 1, 2020	
	80288	68	☐	Warm Mix Asphalt	Jan. 1, 2012	April 1, 2016
	80302	69	☐	Weekly DBE Trucking Reports	June 2, 2012	April 2, 2015
	80414	70	☐	Wood Fence Sight Screen	Aug. 1, 2019	April 1, 2020
	80427	71	☐	Work Zone Traffic Control Devices	Mar. 2, 2020	
	80071	72	■	Working Days	Jan. 1, 2002	

The following special provisions are in the 2021 Supplemental Specifications and Recurring Special Provisions.

File Name	Special Provision Title	New Location(s)	Effective	Revised
80277	Concrete Mix Design – Department Provided	Check Sheet #37	Jan. 1, 2012	April 1, 2016
80405	Elastomeric Bearings	Article 1083.01	Jan. 1, 2019	
80388	Equipment Parking and Storage	Article 701.11	Nov. 1, 2017	
80165	Moisture Cured Urethane Paint System	Article 1008.06	Nov. 1, 2006	Jan. 1, 2010
80349	Pavement Marking Blackout Tape	Articles 701.04, 701.19(f), 701.20(j) and 1095.06	Nov. 1, 2014	April 1, 2016
80371	Pavement Marking Removal	Articles 783.02-783.04, 783.06 and 1101.13	July 1, 2016	
80389	Portland Cement Concrete	Article 1020.04 Table 1 and Note 4	Nov. 1, 2017	
80403	Traffic Barrier Terminal, Type 1 Special	Articles 631.04 and 631.12	Nov. 1, 2018	

The following special provisions have been deleted from use.

File Name	Special Provision Title	Effective	Revised
80317	Surface Testing of Hot-Mix Asphalt Overlays	Jan. 1, 2013	Aug. 1, 2019

The following special provisions require additional information from the designer. The additional information needs to be submitted as a separate document. The Project Coordination and Implementation section will then include the information in the applicable special provision.

- Bridge Demolition Debris
- Building Removal - Case I
- Building Removal – Case II
- Building Removal - Case III
- Building Removal-Case IV
- Completion Date
- Completion Date Plus Working Days
- DBE Participation
- Material Transfer Device
- Railroad Protective Liability Insurance
- Training Special Provisions
- Working Days

COMPENSABLE DELAY COSTS (BDE)

Effective: June 2, 2017
Revised: April 1, 2019

Revise Article 107.40(b) of the Standard Specifications to read:

"(b) Compensation. Compensation will not be allowed for delays, inconveniences, or damages sustained by the Contractor from conflicts with facilities not meeting the above definition; or if a conflict with a utility in an unanticipated location does not cause a shutdown of the work or a documentable reduction in the rate of progress exceeding the limits set herein. The provisions of Article 104.03 notwithstanding, compensation for delays caused by a utility in an unanticipated location will be paid according to the provisions of this Article governing minor and major delays or reduced rate of production which are defined as follows.

(1) Minor Delay. A minor delay occurs when the work in conflict with the utility in an unanticipated location is completely stopped for more than two hours, but not to exceed two weeks.

(2) Major Delay. A major delay occurs when the work in conflict with the utility in an unanticipated location is completely stopped for more than two weeks.

(3) Reduced Rate of Production Delay. A reduced rate of production delay occurs when the rate of production on the work in conflict with the utility in an unanticipated location decreases by more than 25 percent and lasts longer than seven calendar days."

Revise Article 107.40(c) of the Standard Specifications to read:

"(c) Payment. Payment for Minor, Major, and Reduced Rate of Production Delays will be made as follows.

(1) Minor Delay. Labor idled which cannot be used on other work will be paid for according to Article 109.04(b)(1) and (2) for the time between start of the delay and the minimum remaining hours in the work shift required by the prevailing practice in the area.

Equipment idled which cannot be used on other work, and which is authorized to standby on the project site by the Engineer, will be paid for according to Article 109.04(b)(4).

(2) Major Delay. Labor will be the same as for a minor delay.

Equipment will be the same as for a minor delay, except Contractor-owned equipment will be limited to two weeks plus the cost of move-out to either the

Contractor's yard or another job and the cost to re-mobilize, whichever is less. Rental equipment may be paid for longer than two weeks provided the Contractor presents adequate support to the Department (including lease agreement) to show retaining equipment on the job is the most economical course to follow and in the public interest.

(3) Reduced Rate of Production Delay. The Contractor will be compensated for the reduced productivity for labor and equipment time in excess of the 25 percent threshold for that portion of the delay in excess of seven calendar days. Determination of compensation will be in accordance with Article 104.02, except labor and material additives will not be permitted.

Payment for escalated material costs, escalated labor costs, extended project overhead, and extended traffic control will be determined according to Article 109.13."

Revise Article 108.04(b) of the Standard Specifications to read:

"(b) No working day will be charged under the following conditions.

(1) When adverse weather prevents work on the controlling item.

(2) When job conditions due to recent weather prevent work on the controlling item.

(3) When conduct or lack of conduct by the Department or its consultants, representatives, officers, agents, or employees; delay by the Department in making the site available; or delay in furnishing any items required to be furnished to the Contractor by the Department prevents work on the controlling item.

(4) When delays caused by utility or railroad adjustments prevent work on the controlling item.

(5) When strikes, lock-outs, extraordinary delays in transportation, or inability to procure critical materials prevent work on the controlling item, as long as these delays are not due to any fault of the Contractor.

(6) When any condition over which the Contractor has no control prevents work on the controlling item."

Revise Article 109.09(f) of the Standard Specifications to read:

"(f) Basis of Payment. After resolution of a claim in favor of the Contractor, any adjustment in time required for the work will be made according to Section 108. Any adjustment in the costs to be paid will be made for direct labor, direct materials, direct equipment, direct jobsite overhead, direct offsite overhead, and other direct costs allowed by the resolution. Adjustments in costs will not be made for interest charges, loss of anticipated profit, undocumented loss of efficiency, home office overhead and unabsorbed overhead

other than as allowed by Article 109.13, lost opportunity, preparation of claim expenses and other consequential indirect costs regardless of method of calculation.

The above Basis of Payment is an essential element of the contract and the claim cost recovery of the Contractor shall be so limited."

Add the following to Section 109 of the Standard Specifications.

"**109.13 Payment for Contract Delay.** Compensation for escalated material costs, escalated labor costs, extended project overhead, and extended traffic control will be allowed when such costs result from a delay meeting the criteria in the following table.

Contract Type	Cause of Delay	Length of Delay
Working Days	Article 108.04(b)(3) or Article 108.04(b)(4)	No working days have been charged for two consecutive weeks.
Completion Date	Article 108.08(b)(1) or Article 108.08(b)(7)	The Contractor has been granted a minimum two week extension of contract time, according to Article 108.08.

Payment for each of the various costs will be according to the following.

(a) Escalated Material and/or Labor Costs. When the delay causes work, which would have otherwise been completed, to be done after material and/or labor costs have increased, such increases will be paid. Payment for escalated material costs will be limited to the increased costs substantiated by documentation furnished by the Contractor. Payment for escalated labor costs will be limited to those items in Article 109.04(b)(1) and (2), except the 35 percent and 10 percent additives will not be permitted.

(b) Extended Project Overhead. For the duration of the delay, payment for extended project overhead will be paid as follows.

(1) Direct Jobsite and Offsite Overhead. Payment for documented direct jobsite overhead and documented direct offsite overhead, including onsite supervisory and administrative personnel, will be allowed according to the following table.

Original Contract Amount	Supervisory and Administrative Personnel
Up to $5,000,000	One Project Superintendent
Over $ 5,000,000 - up to $25,000,000	One Project Manager, One Project Superintendent or Engineer, and One Clerk
Over $25,000,000 - up to $50,000,000	One Project Manager, One Project Superintendent, One Engineer, and

	One Clerk
Over $50,000,000	One Project Manager, Two Project Superintendents, One Engineer, and One Clerk

(2) Home Office and Unabsorbed Overhead. Payment for home office and unabsorbed overhead will be calculated as 8 percent of the total delay cost.

(c) Extended Traffic Control. Traffic control required for an extended period of time due to the delay will be paid for according to Article 109.04.

When an extended traffic control adjustment is paid under this provision, an adjusted unit price as provided for in Article 701.20(a) for increase or decrease in the value of work by more than ten percent will not be paid.

Upon payment for a contract delay under this provision, the Contractor shall assign subrogation rights to the Department for the Department's efforts of recovery from any other party for monies paid by the Department as a result of any claim under this provision. The Contractor shall fully cooperate with the Department in its efforts to recover from another party any money paid to the Contractor for delay damages under this provision."

80384

DISPOSAL FEES (BDE)

Effective: November 1, 2018

Replace Articles 109.04(b)(5) – 109.04(b)(8) of the Standard Specifications with the following:

"(5) Disposal Fees. When the extra work performed includes paying for disposal fees at a clean construction and demolition debris facility, an uncontaminated soil fill operation or a landfill, the Contractor shall receive, as administrative costs, an amount equal to five percent of the first $10,000 and one percent of any amount over $10,000 of the total approved costs of such fees.

(6) Miscellaneous. No additional allowance will be made for general superintendence, the use of small tools, or other costs for which no specific allowance is herein provided.

(7) Statements. No payment will be made for work performed on a force account basis until the Contractor has furnished the Engineer with itemized statements of the cost of such force account work. Statements shall be accompanied and supported by invoices for all materials used and transportation charges. However, if materials used on the force account work are not specifically purchased for such work but are taken from the Contractor's stock, then in lieu of the invoices, the Contractor shall furnish an affidavit certifying that such materials were taken from his/her stock, that the quantity claimed was actually used, and that the price and transportation claimed represent the actual cost to the Contractor.

Itemized statements at the cost of force account work shall be detailed as follows.

a. Name, classification, date, daily hours, total hours, rate, and extension for each laborer and foreman. Payrolls shall be submitted to substantiate actual wages paid if so requested by the Engineer.

b. Designation, dates, daily hours, total hours, rental rate, and extension for each unit of machinery and equipment.

c. Quantities of materials, prices and extensions.

d. Transportation of materials.

e. Cost of property damage, liability and workmen's compensation insurance premiums, unemployment insurance contributions, and social security tax.

(8) Work Performed by an Approved Subcontractor. When extra work is performed by an approved subcontractor, the Contractor shall receive, as administrative costs, an amount equal to five percent of the total approved costs of such work with the minimum payment being $100.

(9) All statements of the cost of force account work shall be furnished to the Engineer not later than 60 days after receipt of the Central Bureau of Construction form “Extra Work Daily Report”. If the statement is not received within the specified time frame, all demands for payment for the extra work are waived and the Department is released from any and all such demands. It is the responsibility of the Contractor to ensure that all statements are received within the specified time regardless of the manner or method of delivery.”

80402

EMULSIFIED ASPHALTS (BDE)

Effective: August 1, 2019

Revise Article 1032.06 of the Standard Specifications to read:

"**1032.06 Emulsified Asphalts.** Emulsified asphalts will be accepted according to the current Bureau of Materials Policy Memorandum, "Emulsified Asphalt Acceptance Procedure". These materials shall be homogeneous and shall show no separation of asphalt after thorough mixing, within 30 days after delivery, provided separation has not been caused by freezing. They shall coat the aggregate being used in the work to the satisfaction of the Engineer and shall be according to the following requirements.

(a) Anionic Emulsified Asphalt. Anionic emulsified asphalts RS-1, RS-2, HFRS-2, SS-1h, and SS-1 shall be according to AASHTO M 140, except as follows.

(1) The cement mixing test will be waived when the emulsion is being used as a tack coat.

(2) The Solubility in Trichloroethylene test according to AASHTO T 44 may be run in lieu of Ash Content and shall meet a minimum of 97.5 percent.

(b) Cationic Emulsified Asphalt. Cationic emulsified asphalts CRS-1, CRS-2, CSS-1h, and CSS-1 shall be according to AASHTO M 208, except as follows.

(1) The cement mixing test will be waived when the emulsion is being used as a tack coat.

(2) The Solubility in Trichloroethylene test according to AASHTO T 44 may be run in lieu of Ash Content and shall meet a minimum of 97.5 percent.

(c) High Float Emulsion. High float emulsions HFE-90, HFE-150, and HFE-300 are medium setting and shall be according to the following table.

Test	HFE-90	HFE-150	HFE-300
Viscosity, Saybolt Furol, at 122 °F (50 °C), (AASHTO T 59), SFS [1/]	50 min.	50 min.	50 min.
Sieve Test, No. 20 (850 µm), retained on sieve, (AASHTO T 59), %	0.10 max.	0.10 max.	0.10 max.
Storage Stability Test, 1 day, (AASHTO T 59), %	1 max.	1 max.	1 max.
Coating Test (All Grades), (AASHTO T 59), 3 minutes	stone coated thoroughly		
Distillation Test, (AASHTO T 59): Residue from distillation test to 500 °F (260 °C), %	65 min.	65 min.	65 min.
Oil distillate by volume, %	7 max.	7 max.	7 max.

Characteristics of residue from distillation test to 500 °F (260 °C): Penetration at 77 °F (25 °C), (AASHTO T 49), 100 g, 5 sec, dmm	90-150	150-300	300 min.
Float Test at 140 °F (60 °C), (AASHTO T 50), sec.	1200 min.	1200 min.	1200 min.

1/ The emulsion shall be pumpable.

(d) Penetrating Emulsified Prime. Penetrating Emulsified Prime (PEP) shall be according to AASHTO T 59, except as follows.

Test	Result
Viscosity, Saybolt Furol, at 77 °F (25 °C), SFS	75 max.
Sieve test, retained on No. 20 (850 µm) sieve, %	0.10 max.
Distillation to 500 °F (260 °C) residue, %	38 min.
Oil distillate by volume, %	4 max.

The PEP shall be tested according to the current Bureau of Materials Illinois Laboratory Test Procedure (ILTP), "Sand Penetration Test of Penetrating Emulsified Prime (PEP)". The time of penetration shall be equal to or less than that of MC-30. The depth of penetration shall be equal to or greater than that of MC-30.

(e) Delete this subparagraph.

(f) Polymer Modified Emulsified Asphalt. Polymer modified emulsified asphalts, e.g. SS-1hP, CSS-1hP, CRS-2P (formerly CRSP), CQS-1hP (formerly CSS-1h Latex Modified) and HFRS-2P (formerly HFP) shall be according to AASHTO M 316, except as follows.

(1) The cement mixing test will be waived when the polymer modified emulsion is being used as a tack coat.

(2) CQS-1hP (formerly CSS-1h Latex Modified) emulsion for micro-surfacing treatments shall use latex as the modifier.

(3) Upon examination of the storage stability test cylinder after standing undisturbed for 24 hours, the surface shall show minimal to no white, milky colored substance and shall be a homogenous brown color throughout.

(4) The distillation for all polymer modified emulsions shall be performed according to AASHTO T 59, except the temperature shall be 374 ± 9 °F (190 ± 5 °C) to be held for a period of 15 minutes and measured using an ASTM 16F (16C) thermometer.

(5) The specified temperature for the Elastic Recovery test for all polymer modified emulsions shall be 50.0 ± 1.0 °F (10.0 ± 0.5 °C).

(6) The Solubility in Trichloroethylene test according to AASHTO T 44 may be run in lieu of Ash Content and shall meet a minimum of 97.5 percent.

(g) Non-Tracking Emulsified Asphalt. Non-tracking emulsified asphalt NTEA (formerly SS-1vh) shall be according to the following.

Test	Requirement
Saybolt Viscosity at 77 °F (25 °C), (AASHTO T 59), SFS	20-100
Storage Stability Test, 24 hr, (AASHTO T 59), %	1 max.
Residue by Distillation, 500 ± 10 °F (260 ± 5 °C), or Residue by Evaporation, 325 ± 5 °F (163 ± 3 °C), (AASHTO T 59), %	50 min.
Sieve Test, No. 20 (850 µm), (AASHTO T 59), %	0.3 max.
Tests on Residue from Evaporation	
Penetration at 77 °F (25 °C), 100 g, 5 sec, (AASHTO T 49), dmm	40 max.
Softening Point, (AASHTO T 53), °F (°C)	135 (57) min.
Ash Content, (AASHTO T 111), % 1/	1 max.

1/ The Solubility in Trichloroethylene test according to AASHTO T 44 may be run in lieu of Ash Content and shall meet a minimum of 97.5 percent

The different grades are, in general, used for the following.

Grade	Use
SS-1, SS-1h, RS-1, RS-2, CSS-1, CRS-1, CRS-2, CSS-1h, HFE-90, SS-1hP, CSS-1hP, NTEA (formerly SS-1vh)	Tack Coat
PEP	Prime Coat
RS-2, HFE-90, HFE-150, HFE-300, CRS-2P (formerly CRSP), HFRS-2P (formerly HFP), CRS-2, HFRS-2	Bituminous Surface Treatment
CQS-1hP (formerly CSS-1h Latex Modified)	Micro-Surfacing Slurry Sealing Cape Seal”

HOT-MIX ASPHALT – BINDER AND SURFACE COURSE (BDE)

Effective: July 2, 2019
Revised: November 1, 2019

Description. This work shall consist of constructing a hot-mix asphalt (HMA) binder and/or surface course on a prepared base. Work shall be according to Sections 406 and 1030 of the Standard Specifications, except as modified herein.

Materials. Add the following after the second paragraph of Article 1003.03(c):

"For mixture IL-9.5FG, at least 67 percent of the required fine aggregate fraction shall consist of either stone sand, slag sand, steel slag sand, or combinations thereof meeting FA 20 gradation."

Revise Article 1004.03(c) to read:

"(c) Gradation. The coarse aggregate gradations shall be as listed in the following table.

Use	Size/Application	Gradation No.
Class A-1, A-2, & A-3	3/8 in. (10 mm) Seal	CA 16 or CA 20
Class A-1	1/2 in. (13 mm) Seal	CA 15
Class A-2 & A-3	Cover Coat	CA 14
HMA High ESAL	IL-19.0	CA 11 1/
	SMA 12.5 2/	CA 13, CA 14, or CA 16
	SMA 9.5 2/	CA 13 or CA 16 3/
	IL-9.5	CA 16
	IL-9.5FG	CA 16
HMA Low ESAL	IL-19.0L	CA 11 1/
	IL-9.5L	CA 16

1/ CA 16 or CA 13 may be blended with the CA 11.

2/ The coarse aggregates used shall be capable of being combined with stone sand, slag sand, or steel slag sand meeting the FA/FM 20 gradation and mineral filler to meet the approved mix design and the mix requirements noted herein.

3/ The specified coarse aggregate gradations may be blended."

HMA Nomenclature. Revise the "High ESAL" portion of the table in Article 1030.01 to read:

"High ESAL	Binder Courses	IL-19.0, IL-9.5, IL-9.5FG, IL-4.75, SMA 12.5, SMA 9.5

	Surface Courses	IL-9.5, IL-9.5FG, SMA 12.5, SMA 9.5”

Mixture Design. Revise the table in Article 1030.04(a)(1) and add SMA 9.5 and IL-9.5FG mixture compositions as follows:

“HIGH ESAL, MIXTURE COMPOSITION (% PASSING) [1/]						
Sieve Size	SMA 12.5 [5/]		SMA 9.5 [5/]		IL-9.5FG	
	min.	max.	min.	max.	min.	max.
1 in. (25 mm)						
3/4 in. (19 mm)		100		100		
1/2 in. (12.5 mm)	90	99	95	100		100
3/8 in. (9.5 mm)	50	85	70	95	90	100
#4 4.75 mm)	20	40	30	50	60	75
#8 (2.36 mm)	16	24 [4/]	20	30	45	60
#16 (1.18 mm)				21	25	40
#30 (600 μm)				18	15	30
#50 (300 μm)				15	8	15
#100 (150 μm)					6	10
#200 (75 μm)	8.0	11.0 [3/]	8.0	11.0 [3/]	4.0	6.5
#635 (20 μm)		≤ 3.0		≤ 3.0		
Ratio of Dust/Asphalt Binder						1.0

1/ Based on percent of total aggregate weight.

2/ The mixture composition shall not exceed 44 percent passing the #8 (2.36 mm) sieve for surface courses with Ndesign = 90.

3/ Additional minus No. 200 (0.075 mm) material required by the mix design shall be mineral filler, unless otherwise approved by the Engineer.

4/ When establishing the adjusted job mix formula (AJMF) the percent passing the #8 (2.36 mm) sieve shall not be adjusted above 24 percent.

5/ When the bulk specific gravity (Gsb) of the component aggregates vary by more than 0.2, the blend gradations shall be based on volumetric percentage."

Revise the table in Article 1030.04(b)(1) to read:

<table>
<tr><td colspan="5">"VOLUMETRIC REQUIREMENTS, High ESAL</td></tr>
<tr><td rowspan="2">Ndesign</td><td colspan="3">Voids in the Mineral Aggregate (VMA), % minimum</td><td rowspan="2">Voids Filled with Asphalt Binder (VFA),%</td></tr>
<tr><td>IL-19.0</td><td>IL-9.5
IL-9.5FG</td><td>IL-4.75 1/</td></tr>
<tr><td>50</td><td rowspan="3">13.5</td><td rowspan="3">15.0</td><td>18.5</td><td>65 - 78 2/</td></tr>
<tr><td>70</td><td rowspan="2"></td><td rowspan="2">65 – 75 3/</td></tr>
<tr><td>90</td></tr>
</table>

1/ Maximum draindown for IL-4.75 shall be 0.3 percent.

2/ VFA for IL-4.75 shall be 76-83 percent.

3/ VFA for IL-9.5FG shall be 65-78 percent."

Revise the table in Article 1030.04(b)(3) to read:

<table>
<tr><td colspan="5">"VOLUMETRIC REQUIREMENTS, SMA 12.5 1/ and SMA 9.5 1/</td></tr>
<tr><td>ESALs (million)</td><td>Ndesign</td><td>Design Air Voids Target, %</td><td>Voids in the Mineral Aggregate (VMA), % min.</td><td>Voids Filled with Asphalt (VFA), %</td></tr>
<tr><td>≤ 10</td><td>50</td><td>4.0</td><td>16.0</td><td>75 – 80</td></tr>
<tr><td>> 10</td><td>80</td><td>4.0</td><td>17.0</td><td>75 – 80</td></tr>
</table>

1/ Maximum draindown shall be 0.3 percent."

Quality Control/Quality Assurance (QC/QA). Revise the third paragraph of Article 1030.05(d)(3) to read:

"If the Contractor and Engineer agree the nuclear density test method is not appropriate for the mixture, cores shall be taken at random locations determined according to the

QC/QA document "Determination of Random Density Test Site Locations". Core densities shall be determined using the Illinois Modified AASHTO T 166 or T 275 procedure."

Add the following paragraphs to the end of Article 1030.05(d)(3):

"Longitudinal joint density testing shall be performed at each random density test location. Longitudinal joint testing shall be located at a distance equal to the lift thickness or a minimum of 4 in. (100 mm), from each pavement edge (i.e. for a 5 in. (125 mm) lift the near edge of the density gauge or core barrel shall be within 5 in. (125 mm) from the edge of pavement). Longitudinal joint density testing shall be performed using either a correlated nuclear gauge or cores.

a. Confined Edge. Each confined edge density shall be represented by a one-minute nuclear density reading or a core density and shall be included in the average of density readings or core densities taken across the mat which represents the Individual Test.

b. Unconfined Edge. Each unconfined edge joint density shall be represented by an average of three one-minute density readings or a single core density at the given density test location and shall meet the density requirements specified herein. The three one-minute readings shall be spaced 10 ft (3 m) apart longitudinally along the unconfined pavement edge and centered at the random density test location.

When a longitudinal joint sealant (LJS) is applied, longitudinal joint density testing will not be required on the joint(s) sealed."

Revise the second table in Article 1030.05(d)(4) and its notes to read:

"DENSITY CONTROL LIMITS			
Mixture Composition	Parameter	Individual Test (includes confined edges)	Unconfined Edge Joint Density, minimum
IL-4.75	Ndesign = 50	93.0 – 97.4 % 1/	91.0%
IL-9.5FG	Ndesign = 50 - 90	93.0 – 97.4 %	91.0%
IL-9.5	Ndesign = 90	92.0 – 96.0 %	90.0%
IL-9.5, IL-9.5L,	Ndesign < 90	92.5 – 97.4 %	90.0%
IL-19.0	Ndesign = 90	93.0 – 96.0 %	90.0%
IL-19.0, IL-19.0L	Ndesign < 90	93.0 2/ – 97.4 %	90.0%
SMA	Ndesign = 50 or 80	93.5 – 97.4 %	91.0%

1/ Density shall be determined by cores or by correlated, approved thin lift nuclear gauge.

2/ 92.0 % when placed as first lift on an unimproved subgrade."

Equipment. Add the following to Article 1101.01 of the Standard Specifications:

"(h) Oscillatory Roller. The oscillatory roller shall be self-propelled and provide a smooth operation when starting, stopping, or reversing directions. The oscillatory roller shall be able to operate in a mode that will provide tangential impact force with or without vertical impact force by using at least one drum. The oscillatory roller shall be equipped with water tanks and sprinkling devices, or other approved methods, which shall be used to wet the drums to prevent material pickup. The drum(s) amplitude and frequency of the tangential and vertical impact force shall be approximately the same in each direction and meet the following requirements:

(1) The minimum diameter of the drum(s) shall be 42 in. (1070 mm);

(2) The minimum length of the drum(s) shall be 57 in. (1480 mm);

(3) The minimum unit static force on the drum(s) shall be 125 lb/in. (22 N/m); and

(4) The minimum force on the oscillatory drum shall be 18,000 lb (80 kN)."

CONSTRUCTION REQUIREMENTS

Add the following to Article 406.03 of the Standard Specifications:

"(j) Oscillatory Roller .....1101.01"

Revise the third paragraph of Article 406.05(a) to read:

"All depressions of 1 in. (25 mm) or more in the surface of the existing pavement shall be filled with binder. At locations where heavy disintegration and deep spalling exists, the area shall be cleaned of all loose and unsound material, tacked, and filled with binder (hand method)."

Revise Article 406.05(c) to read.

"(c) Binder (Hand Method). Binder placed other than with a finishing machine will be designated as binder (hand method) and shall be compacted with a roller to the satisfaction of the Engineer. Hand tamping will be permitted when approved by the Engineer."

Revise the special conditions for mixture IL-4.75 in Article 406.06(b)(2)e. to read:

"e. The mixture shall be overlaid within 5 days of being placed."

Revise Article 406.06(d) to read:

"(d) Lift Thickness. The minimum compacted lift thickness for HMA binder and surface courses shall be as follows.

MINIMUM COMPACTED LIFT THICKNESS	
Mixture Composition	Thickness, in. (mm)
IL-4.75	3/4 (19) - over HMA surfaces [1/] 1 (25) - over PCC surfaces [1/]
IL-9.5FG	1 1/4 (32)
IL-9.5, IL-9.5L	1 1/2 (38)
SMA 9.5	1 1/2 (38)
SMA 12.5	2 (51)
IL-19.0, IL-19.0L	2 1/4 (57)

1/ The maximum compacted lift thickness for mixture IL-4.75 shall be 1 1/4 in. (32 mm)."

Revise Table 1 and Note 3/ of Table 1 in Article 406.07(a) of the Standard Specifications to read:

"TABLE 1 - MINIMUM ROLLER REQUIREMENTS FOR HMA				
	Breakdown Roller (one of the following)	Intermediate Roller	Final Roller (one or more of the following)	Density Requirement
Binder and Surface [1/]	V_D, P [3/], T_B, 3W, O_T, O_B	P [3/], O_T, O_B	V_S, T_B, T_F, O_T	As specified in Articles: 1030.05(d)(3), (d)(4), and (d)(7).
IL-4.75 and SMA [4/ 5/]	T_B, 3W, O_T	- -	T_F, 3W, O_T	
Bridge Decks [2/]	T_B	- -	T_F	As specified in Articles 582.05 and 582.06.

3/ A vibratory roller (V_D) or oscillatory roller (O_T or O_B) may be used in lieu of the pneumatic-tired roller on mixtures containing polymer modified asphalt binder."

Add the following to EQUIPMENT DEFINITION in Article 406.07(a) contained in the Errata of the Supplemental Specifications:

"O_T - Oscillatory roller, tangential impact mode. Maximum speed is 3.0 mph (4.8 km/h) or 264 ft/min (80 m/min).

O_B - Oscillatory roller, tangential and vertical impact mode, operated at a speed to produce not less than 10 vertical impacts/ft (30 impacts/m)."

Basis of Payment. Replace the second through the fifth paragraphs of Article 406.14 with the following:

"HMA binder and surface courses will be paid for at the contract unit price per ton (metric ton) for MIXTURE FOR CRACKS, JOINTS, AND FLANGEWAYS; HOT-MIX ASPHALT BINDER COURSE (HAND METHOD), of the Ndesign specified; HOT-MIX ASPHALT BINDER COURSE, of the mixture composition and Ndesign specified; HOT-MIX ASPHALT SURFACE COURSE, of the mixture composition, friction aggregate, and Ndesign specified; POLYMERIZED HOT-MIX ASPHALT BINDER COURSE (HAND METHOD), of the Ndesign specified; POLYMERIZED HOT-MIX ASPHALT BINDER COURSE, of the mixture composition and Ndesign specified; POLYMERIZED HOT-MIX ASPHALT SURFACE COURSE, of the mixture composition, friction aggregate, and Ndesign specified; POLYMERIZED HOT-MIX ASPHALT BINDER COURSE, STONE MATRIX ASPHALT, of the mixture composition and Ndesign specified; POLYMERIZED HOT-MIX ASPHALT SURFACE COURSE, STONE MATRIX ASPHALT, of the mixture composition, friction aggregate, and Ndesign specified."

80416

PORTLAND CEMENT CONCRETE – HAUL TIME (BDE)

Effective: July 1, 2020

Revise Article 1020.11(a)(7) of the Standard Specifications to read:

"(7) Haul Time. Haul time shall begin when the delivery ticket is stamped. The delivery ticket shall be stamped no later than five minutes after the addition of the mixing water to the cement, or after the addition of the cement to the aggregate when the combined aggregates contain free moisture in excess of two percent by weight (mass). If more than one batch is required for charging a truck using a stationary mixer, the time of haul shall start with mixing of the first batch. Haul time shall end when the truck is emptied for incorporation of the concrete into the work. The maximum haul time shall be as follows.

Concrete Temperature at Point of Discharge, °F (°C)	Maximum Haul Time 1/ (minutes)	
	Truck Mixer or Truck Agitator	Nonagitator Truck
50 - 64 (10 - 17.5)	90	45
> 64 (> 17.5) - without retarder	60	30
> 64 (> 17.5) - with retarder	90	45

1/ To encourage start-up testing for mix adjustments at the plant, the first two trucks will be allowed an additional 15 minutes haul time whenever such testing is performed.

For a mixture which is not mixed on the jobsite, a delivery ticket shall be required for each load. The following information shall be recorded on each delivery ticket: (1) ticket number; (2) name of producer and plant location; (3) contract number; (4) name of Contractor; (5) stamped date and time batched; (6) truck number; (7) quantity batched; (8) amount of admixture(s) in the batch; (9) amount of water in the batch; and (10) Department mix design number.

For concrete mixed in jobsite stationary mixers, the above delivery ticket may be waived, but a method of verifying the haul time shall be established to the satisfaction of the Engineer."

80430

RECLAIMED ASPHALT PAVEMENT AND RECLAIMED ASPHALT SHINGLES (BDE)

Effective: November 1, 2012
Revised: January 2, 2021

Revise Section 1031 of the Standard Specifications to read:

"**SECTION 1031. RECLAIMED ASPHALT PAVEMENT AND RECLAIMED ASPHALT SHINGLES**

1031.01 Description. Reclaimed asphalt pavement and reclaimed asphalt shingles shall be according to the following.

(a) Reclaimed Asphalt Pavement (RAP). RAP is the material produced by cold milling or crushing an existing hot-mix asphalt (HMA) pavement. The Contractor shall supply written documentation that the RAP originated from routes or airfields under federal, state, or local agency jurisdiction.

(b) Reclaimed Asphalt Shingles (RAS). RAS is the material produced from the processing and grinding of preconsumer or post-consumer shingles. RAS shall be a clean and uniform material with a maximum of 0.5 percent unacceptable material by weight of RAS, as defined in the Bureau of Materials Policy Memorandum, "Reclaimed Asphalt Shingle (RAS) Sources". RAS shall come from a facility source on the Department's "Qualified Producer List of Certified Sources for Reclaimed Asphalt Shingles" where it shall be ground and processed to 100 percent passing the 3/8 in. (9.5 mm) sieve and 93 percent passing the #4 (4.75 mm) sieve based on a dry shake gradation. RAS shall be uniform in gradation and asphalt binder content and shall meet the testing requirements specified herein. In addition, RAS shall meet the following Type 1 or Type 2 requirements.

(1) Type 1. Type 1 RAS shall be processed, preconsumer asphalt shingles salvaged from the manufacture of residential asphalt roofing shingles.

(2) Type 2. Type 2 RAS shall be processed post-consumer shingles only, salvaged from residential, or four unit or less dwellings not subject to the National Emission Standards for Hazardous Air Pollutants (NESHAP).

1031.02 Stockpiles. RAP and RAS stockpiles shall be according to the following.

(a) RAP Stockpiles. The Contractor shall construct individual RAP stockpiles meeting one of the following definitions. Stockpiles shall be sufficiently separated to prevent intermingling at the base. Stockpiles shall be identified by signs indicating the type as listed below (i.e. "Homogeneous Surface").

Prior to milling, the Contractor shall request the Department provide documentation on the quality of the RAP to clarify the appropriate stockpile.

(1) Fractionated RAP (FRAP). FRAP shall consist of RAP from Class I, HMA (High and Low ESAL) mixtures. The coarse aggregate in FRAP shall be crushed aggregate and may represent more than one aggregate type and/or quality but shall be at least C quality. FRAP shall be fractionated prior to testing by screening into a minimum of two size fractions with the separation occurring on or between the No. 4 (4.75 mm) and 1/2 in. (12.5 mm) sieves. Agglomerations shall be minimized such that 100 percent of the RAP in the coarse fraction shall pass the maximum sieve size specified for the mixture composition of the mix design.

(2) Homogeneous. Homogeneous RAP stockpiles shall consist of RAP from Class I, HMA (High and Low ESAL) mixtures and represent: 1) the same aggregate quality, but shall be at least C quality; 2) the same type of crushed aggregate (either crushed natural aggregate, ACBF slag, or steel slag); 3) similar gradation; and 4) similar asphalt binder content. If approved by the Engineer, combined single pass surface/binder millings may be considered "homogeneous" with a quality rating dictated by the lowest coarse aggregate quality present in the mixture.

(3) Conglomerate. Conglomerate RAP stockpiles shall consist of RAP from Class I, HMA (High and Low ESAL) mixtures. The coarse aggregate in this RAP shall be crushed aggregate and may represent more than one aggregate type and/or quality but shall be at least C quality. This RAP may have an inconsistent gradation and/or asphalt binder content prior to processing. Conglomerate RAP shall be processed prior to testing by crushing to where all RAP shall pass the 5/8 in. (16 mm) or smaller screen. Conglomerate RAP stockpiles shall not contain steel slag.

(4) Conglomerate "D" Quality (Conglomerate DQ). Conglomerate DQ RAP stockpiles shall be according to Articles 1031.02(a)(1)-1031.02(a)(3), except they may also consist of RAP from HMA shoulders, bituminous stabilized subbases, or HMA (High or Low ESAL) binder mixture. The coarse aggregate in this RAP may be crushed or round but shall be at least D quality. This RAP may have an inconsistent gradation and/or asphalt binder content.

(5) Non-Quality. RAP stockpiles that do not meet the requirements of the stockpile categories listed above shall be classified as "Non-Quality".

RAP/FRAP containing contaminants, such as earth, brick, sand, concrete, sheet asphalt, non-bituminous surface treatment (i.e. high friction surface treatments), pavement fabric, joint sealants, plant cleanout, etc., will be unacceptable unless the contaminants are removed to the satisfaction of the Engineer. Sheet asphalt shall be stockpiled separately.

(b) RAS Stockpiles. Type 1 and Type 2 RAS shall be stockpiled separately and shall not be intermingled. Each stockpile shall be signed indicating what type of RAS is present.

Unless otherwise specified by the Engineer, mechanically blending manufactured sand (FM 20 or FM 22) or fine FRAP up to an equal weight of RAS with the processed RAS will be permitted to improve workability. The sand shall be B quality or better from an

approved Aggregate Gradation Control System source. The sand shall be accounted for in the mix design and during HMA production.

Records identifying the shingle processing facility supplying the RAS, RAS type, and lot number shall be maintained by project contract number and kept for a minimum of three years.

Additional processed RAP/FRAP/RAS shall be stockpiled in a separate working pile, as designated in the QC Plan, and only added to the original stockpile after the test results for the working pile are found to meet the requirements specified in Articles 1031.03 and 1031.04.

1031.03 Testing. RAP/FRAP and RAS testing shall be according to the following.

(a) RAP/FRAP Testing. When used in HMA, the RAP/FRAP shall be sampled and tested either during or after stockpiling.

(1) During Stockpiling. For testing during stockpiling, washed extraction samples shall be run at the minimum frequency of one sample per 500 tons (450 metric tons) for the first 2,000 tons (1,800 metric tons) and one sample per 2,000 tons (1,800 metric tons) thereafter. A minimum of five tests shall be required for stockpiles less than 4,000 tons (3,600 metric tons).

(2) After Stockpiling. For testing after stockpiling, the Contractor shall submit a plan for approval to the Department proposing a satisfactory method of sampling and testing the RAP/FRAP pile either in-situ or by restockpiling. The sampling plan shall meet the minimum frequency required above and detail the procedure used to obtain representative samples throughout the pile for testing.

Each sample shall be split to obtain two equal samples of test sample size. One of the two test samples from the final split shall be labeled and stored for Department use. The Contractor shall perform a washed extraction on the other test sample according to Illinois Modified AASHTO T 164. The Engineer reserves the right to test any sample (split or Department-taken) to verify Contractor test results.

(b) RAS Testing. RAS or RAS blended with manufactured sand shall be sampled and tested during stockpiling according to the Bureau of Materials Policy Memorandum, “Reclaimed Asphalt Shingle (RAS) Source”.

Samples shall be collected during stockpiling at the minimum frequency of one sample per 200 tons (180 metric tons) for the first 1,000 tons (900 metric tons) and one sample per 500 tons (450 metric tons) or a minimum of once per week, whichever is more frequent, thereafter. A minimum of five samples are required for stockpiles less than 1,000 tons (900 metric tons).

Before testing, each sample shall be split to obtain two test samples. One of the two test samples from the final split shall be labeled and stored for Department use. The

Contractor shall perform a washed extraction and test for unacceptable materials on the other test sample according to Illinois Modified AASHTO T 164. The Engineer reserves the right to test any sample (split or Department-taken) to verify Contractor test results.

The Contractor shall obtain and make available all of the test results from the start of the original stockpile.

1031.04 Evaluation of Tests. Evaluation of test results shall be according to the following.

(a) Limits of Precision. The limits of precision between the Contractor's and the Department's split sample test results shall be according to the following.

Test Parameter	Limits of Precision		
% Passing	RAP	FRAP	RAS
1/2 in. (12.5 mm)	6.0 %	5.0 %	
# 4 (4.75 mm)	6.0 %	5.0 %	
# 8 (2.36 mm)	4.0 %	3.0 %	4.0 %
# 30 (600 µm)	3.0 %	2.0 %	4.0 %
# 200 (75 µm)	2.5 %	2.2 %	4.0 %
Asphalt Binder	0.4 %	0.3 %	3.0 %
G_{mm}	0.035	0.030	

If the test results are outside the above limits of precision, the Department will immediately investigate.

(b) Evaluation of RAP/FRAP Test Results. All of the extraction results shall be compiled and averaged for asphalt binder content and gradation, and when applicable G_{mm}. Individual extraction test results, when compared to the averages, will be accepted if within the tolerances listed below.

Parameter	FRAP/Homogeneous/ Conglomerate
1 in. (25 mm)	
1/2 in. (12.5 mm)	± 8 %
# 4 (4.75 mm)	± 6 %
# 8 (2.36 mm)	± 5 %
# 16 (1.18 mm)	
# 30 (600 µm)	± 5 %
# 200 (75 µm)	± 2.0 %
Asphalt Binder	± 0.4 % 1/
G_{mm}	± 0.03 2/

1/ The tolerance for FRAP shall be ± 0.3 percent.

2/ For stockpile with slag or steel slag present as determined in the current Manual of Test Procedures Appendix B 21, "Determination of Aggregate Bulk (Dry) Specific Gravity (Gsb) of Reclaimed Asphalt Pavement (RAP) and Reclaimed Asphalt Shingles (RAS)".

If more than 20 percent of the test results for an individual parameter (individual sieves, G_{mm}, and/or asphalt binder content) are out of the above tolerances, the RAP/FRAP shall not be used in HMA unless the RAP/FRAP representing the failing tests is removed from the stockpile. All test data and acceptance ranges shall be sent to the Department for evaluation.

With the approval of the Engineer, the ignition oven may be substituted for solvent extractions according to the document "Calibration of the Ignition Oven for the Purpose of Characterizing Reclaimed Asphalt Pavement (RAP)".

(c) Evaluation of RAS and RAS Blended with Manufactured Sand or Fine FRAP Test Results. All of the test results, with the exception of percent unacceptable materials, shall be compiled and averaged for asphalt binder content and gradation. Individual test results, when compared to the averages, will be accepted if within the tolerances listed below.

Parameter	RAS
# 8 (2.36 mm)	± 5 %
# 16 (1.18 mm)	± 5 %
# 30 (600 µm)	± 4 %
# 200 (75 µm)	± 2.5 %
Asphalt Binder Content	± 2.0 %

If more than 20 percent of the test results for an individual parameter (individual sieves and/or asphalt binder content) are out of the above tolerances, or if the unacceptable material exceeds 0.5 percent by weight of material retained on the No. 4 (4.75 mm) sieve, the RAS or RAS blend shall not be used in Department projects. All test data and acceptance ranges shall be sent to the Department for evaluation.

1031.05 Quality Designation of Aggregate in RAP/FRAP.

(a) RAP. The aggregate quality of the RAP for homogeneous, conglomerate, and conglomerate DQ stockpiles shall be set by the lowest quality of coarse aggregate in the RAP stockpile and are designated as follows.

(1) RAP from Class I, HMA (High ESAL), or (Low ESAL) IL-9.5L surface mixtures are designated as containing Class B quality coarse aggregate.

(2) RAP from Class I binder, HMA (High ESAL) binder, or (Low ESAL) IL-19.0L binder mixtures are designated as containing Class C quality coarse aggregate.

(3) RAP from BAM stabilized subbase and BAM shoulders are designated as containing Class D quality coarse aggregate.

(b) FRAP. If the Engineer has documentation of the quality of the FRAP aggregate, the Contractor shall use the assigned quality provided by the Engineer.

If the quality is not known, the quality shall be determined as follows. Coarse and fine FRAP stockpiles containing plus No. 4 (4.75 mm) sieve coarse aggregate shall have a maximum tonnage of 5,000 tons (4,500 metric tons). The Contractor shall obtain a representative sample witnessed by the Engineer. The sample shall be a minimum of 50 lb (25 kg). The sample shall be extracted according to Illinois Modified AASHTO T 164 by a consultant laboratory prequalified by the Department for the specified testing. The consultant laboratory shall submit the test results along with the recovered aggregate sample to the District Office. Consultant laboratory services will be at no additional cost to the Department. The District will forward the sample to the Central Bureau of Materials Aggregate Lab for MicroDeval Testing, according to ITP 327. A maximum loss of 15.0 percent will be applied for all HMA applications.

1031.06 Use of RAP/FRAP and/or RAS in HMA. The use of RAP/FRAP and/or RAS shall be the Contractor's option when constructing HMA in all contracts.

(a) RAP/FRAP. The use of RAP/FRAP in HMA shall be as follows.

(1) Coarse Aggregate Size. The coarse aggregate in all RAP shall be equal to or less than the nominal maximum size requirement for the HMA mixture to be produced.

(2) Steel Slag Stockpiles. Homogeneous RAP stockpiles containing steel slag will be approved for use in all HMA (High ESAL and Low ESAL) surface and binder mixture applications.

(3) Use in HMA Surface Mixtures (High and Low ESAL). RAP/FRAP stockpiles for use in HMA surface mixtures (High and Low ESAL) shall be FRAP or homogeneous in which the coarse aggregate is Class B quality or better. FRAP from conglomerate stockpiles shall be considered equivalent to limestone for frictional considerations. Known frictional contributions from plus No. 4 (4.75 mm) homogeneous FRAP stockpiles will be accounted for in meeting frictional requirements in the specified mixture.

(4) Use in HMA Binder Mixtures (High and Low ESAL), HMA Base Course, and HMA Base Course Widening. RAP/FRAP stockpiles for use in HMA binder mixtures (High and Low ESAL), HMA base course, and HMA base course widening shall be FRAP, homogeneous, or conglomerate, in which the coarse aggregate is Class C quality or better.

(5) Use in Shoulders and Subbase. RAP/FRAP stockpiles for use in HMA shoulders and stabilized subbase (HMA) shall be FRAP, homogeneous, or conglomerate.

(6) When the Contractor chooses the RAP option, the percentage of RAP shall not exceed the amounts indicated in Article 1031.06(c)(1) below for a given Ndesign.

(b) RAS. RAS meeting Type 1 or Type 2 requirements will be permitted in all HMA applications as specified herein.

(c) RAP/FRAP and/or RAS Usage Limits. Type 1 or Type 2 RAS may be used alone or in conjunction with RAP or FRAP in HMA mixtures up to a maximum of 5.0 percent by weight of the total mix.

(1) RAP/RAS. When RAP is used alone or RAP is used in conjunction with RAS, the percentage of virgin asphalt binder replacement (ABR) shall not exceed the amounts listed in the following table.

HMA Mixtures - RAP/RAS Maximum ABR % 1/ 2/			
Ndesign	Binder	Surface	Polymer Modified Binder or Surface
30	30	30	10
50	25	15	10
70	15	10	10
90	10	10	10

1/ For Low ESAL HMA shoulder and stabilized subbase, the RAP/RAS ABR shall not exceed 50 percent of the mixture.

2/ When RAP/RAS ABR exceeds 20 percent, the high and low virgin asphalt binder grades shall each be reduced by one grade (i.e. 25 percent ABR would require a virgin asphalt binder grade of PG 64-22 to be reduced to a PG 58-28).

(2) FRAP/RAS. When FRAP is used alone or FRAP is used in conjunction with RAS, the percentage of virgin asphalt binder replacement shall not exceed the amounts listed in the following table.

HMA Mixtures - FRAP/RAS Maximum ABR % 1/ 2/			
Ndesign	Binder	Surface	Polymer Modified Binder or Surface
30	55	45	15
50	45	40	15
70	45	35	15
90	45	35	15
SMA	- -	- -	25

IL-4.75	- -	- -	35

1/ For Low ESAL HMA shoulder and stabilized subbase, the FRAP/RAS ABR shall not exceed 50 percent of the mixture.

2/ When FRAP/RAS ABR exceeds 20 percent for all mixes, the high and low virgin asphalt binder grades shall each be reduced by one grade (i.e. 25 percent ABR would require a virgin asphalt binder grade of PG 64-22 to be reduced to a PG 58-28).

1031.07 HMA Mix Designs. At the Contractor's option, HMA mixtures may be constructed utilizing RAP/FRAP and/or RAS material meeting the detailed requirements specified herein.

(a) RAP/FRAP and/or RAS. RAP/FRAP and/or RAS mix designs shall be submitted for verification. If additional RAP/FRAP and/or RAS stockpiles are tested and found that no more than 20 percent of the individual parameter test results, as defined in Article 1031.04, are outside of the control tolerances set for the original RAP/FRAP and/or RAS stockpile and HMA mix design, and meets all of the requirements herein, the additional RAP/FRAP and/or RAS stockpiles may be used in the original mix design at the percent previously verified.

(b) RAS. Type 1 and Type 2 RAS are not interchangeable in a mix design.

The RAP, FRAP, and RAS stone bulk specific gravities (G_{sb}) shall be according to the "Determination of Aggregate Bulk (Dry) Specific Gravity (G_{sb}) of Reclaimed Asphalt Pavement (RAP) and Reclaimed Asphalt Shingles (RAS)" procedure in the Department's Manual of Test Procedures for Materials.

1031.08 HMA Production. HMA production utilizing RAP/FRAP and/or RAS shall be as follows.

To remove or reduce agglomerated material, a scalping screen, gator, crushing unit, or comparable sizing device approved by the Engineer shall be used in the RAP/FRAP and/or RAS feed system to remove or reduce oversized material.

If the RAP/FRAP and/or RAS control tolerances or QC/QA test results require corrective action, the Contractor shall cease production of the mixture containing RAP/FRAP and/or RAS and either switch to the virgin aggregate design or submit a new mix design.

(a) RAP/FRAP. The coarse aggregate in all RAP/FRAP used shall be equal to or less than the nominal maximum size requirement for the HMA mixture being produced.

(b) RAS. RAS shall be incorporated into the HMA mixture either by a separate weight depletion system or by using the RAP weigh belt. Either feed system shall be interlocked with the aggregate feed or weigh system to maintain correct proportions for all rates of production and batch sizes. The portion of RAS shall be controlled accurately to within

± 0.5 percent of the amount of RAS utilized. When using the weight depletion system, flow indicators or sensing devices shall be provided and interlocked with the plant controls such that the mixture production is halted when RAS flow is interrupted.

(c) RAP/FRAP and/or RAS. HMA plants utilizing RAP/FRAP and/or RAS shall be capable of automatically recording and printing the following information.

(1) Dryer Drum Plants.

a. Date, month, year, and time to the nearest minute for each print.

b. HMA mix number assigned by the Department.

c. Accumulated weight of dry aggregate (combined or individual) in tons (metric tons) to the nearest 0.1 ton (0.1 metric ton).

d. Accumulated dry weight of RAP/FRAP/RAS in tons (metric tons) to the nearest 0.1 ton (0.1 metric ton).

e. Accumulated mineral filler in revolutions, tons (metric tons), etc. to the nearest 0.1 unit.

f. Accumulated asphalt binder in gallons (liters), tons (metric tons), etc. to the nearest 0.1 unit.

g. Residual asphalt binder in the RAP/FRAP/RAS material as a percent of the total mix to the nearest 0.1 percent.

h. Aggregate and RAP/FRAP/RAS moisture compensators in percent as set on the control panel. (Required when accumulated or individual aggregate and RAP/FRAP/RAS are recorded in a wet condition.)

i. A positive dust control system shall be utilized when the combined contribution of reclaimed material passing the No. 200 sieve exceeds 1.5 percent.

(2) Batch Plants.

a. Date, month, year, and time to the nearest minute for each print.

b. HMA mix number assigned by the Department.

c. Individual virgin aggregate hot bin batch weights to the nearest pound (kilogram).

d. Mineral filler weight to the nearest pound (kilogram).

e. RAP/FRAP/RAS weight to the nearest pound (kilogram).

f. Virgin asphalt binder weight to the nearest pound (kilogram).

g. Residual asphalt binder in the RAP/FRAP/RAS material as a percent of the total mix to the nearest 0.1 percent.

The printouts shall be maintained in a file at the plant for a minimum of one year or as directed by the Engineer and shall be made available upon request. The printing system will be inspected by the Engineer prior to production and verified at the beginning of each construction season thereafter.

1031.09 RAP in Aggregate Applications. RAP in aggregate applications shall be according to the Bureau of Materials Policy Memorandum, "Reclaimed Asphalt Pavement (RAP) for Aggregate Applications" and the following.

(a) RAP in Aggregate Surface Course and Aggregate Wedge Shoulders, Type B. The use of RAP in aggregate surface course (temporary access entrances only) and aggregate wedge shoulders, Type B shall be as follows.

(1) Stockpiles and Testing. RAP stockpiles may be any of those listed in Article 1031.02, except "Non-Quality" and "FRAP". The testing requirements of Article 1031.03 shall not apply.

(2) Gradation. One hundred percent of the RAP material shall pass the 1 1/2 in. (37.5 mm) sieve. The RAP material shall be reasonably well graded from coarse to fine. RAP material that is gap-graded or single sized will not be accepted.

(b) RAP in Aggregate Subgrade Improvement (ASI). RAP in ASI shall be according to Article 1031.06, except "Conglomerate DQ" and "Non-Quality" may be used."

REMOVAL AND DISPOSAL OF REGULATED SUBSTANCES (BDE)

Effective: January 1, 2019
Revised: January 1, 2020

Revise Section 669 of the Standard Specifications to read:

"**SECTION 669. REMOVAL AND DISPOSAL OF REGULATED SUBSTANCES**

669.01 Description. This work shall consist of the transportation and proper disposal of regulated substances. This work shall also consist of the removal, transportation, and proper disposal of underground storage tanks (UST), their contents and associated underground piping to the point where the piping is above the ground, including determining the content types and estimated quantities.

669.02 Equipment. The Contractor shall notify the Engineer of the delivery of all excavation, storage, and transportation equipment to a work area location. The equipment shall comply with OSHA and American Petroleum Institute (API) guidelines and shall be furnished in a clean condition. Clean condition means the equipment does not contain any residual material classified as a non-special waste, non-hazardous special waste, or hazardous waste. Residual materials include, but are not limited to, petroleum products, chemical products, sludges, or any other material present in or on equipment.

Before beginning any associated soil or groundwater management activity, the Contractor shall provide the Engineer with the opportunity to visually inspect and approve the equipment. If the equipment contains any contaminated residual material, decontamination shall be performed on the equipment as appropriate to the regulated substance and degree of contamination present according to OSHA and API guidelines. All cleaning fluids used shall be treated as the contaminant unless laboratory testing proves otherwise.

669.03 Pre-Construction Submittals and Qualifications. Prior to beginning this work, or working in areas with regulated substances, the Contractor shall submit a "Regulated Substances Pre-Construction Plan (RSPCP)" to the Engineer for review and approval using form BDE 2730. The form shall be signed by an Illinois licensed Professional Engineer or Professional Geologist.

As part of the RSPCP, the Contractor(s) or firm(s) performing the work shall meet the following qualifications.

(a) Regulated Substances Monitoring. Qualification for environmental observation and field screening of regulated substances work and environmental observation of UST removal shall require either pre-qualification in Hazardous Waste by the Department or demonstration of acceptable project experience in remediation and operations for contaminated sites in accordance with applicable Federal, State, or local regulatory requirements using BDE 2730.

Qualification for each individual performing regulated substances monitoring shall require a minimum of one-year of experience in similar activities as those required for the project.

(b) Underground Storage Tank Removal. Qualification for underground storage tank (UST) removal work shall require licensing and certification with the Office of the State Fire Marshall (OSFM) and possession of all permits required to perform the work. A copy of the permit shall be provided to the Engineer prior to tank removal.

The qualified Contractor(s) or firm(s) shall also document it does not have any current or former ties with any of the properties contained within, adjoining, or potentially affecting the work.

The Engineer will require up to 21 calendar days for review of the RSPCP. The review may involve rejection or revision and resubmittal; in which case, an additional 21 days will be required for each subsequent review. Work shall not commence until the RSPCP has been approved by the Engineer. After approval, the RSPCP shall be revised as necessary to reflect changed conditions in the field and documented using BDE 2730A "Regulated Substances Pre-Construction Plan (RSPCP) Addendum" and submitted to the Engineer for approval.

CONSTRUCTION REQUIREMENTS

669.04 Regulated Substances Monitoring. Regulated substances monitoring includes environmental observation and field screening during regulated substances management activities at the contract specific work areas. As part of the regulated substances monitoring, the monitoring personnel shall perform and document the applicable duties listed on form BDE 2732 "Regulated Substances Monitoring Daily Record (RSMDR)".

(a) Environmental Observation. Prior to beginning excavation, the Contractor shall mark the limits of the contract specific work areas. Once work begins, the monitoring personnel shall be present on-site continuously during the excavation and loading of material.

(b) Field Screening. Field screening shall be performed during the excavation and loading of material from the contract specific work areas, except for material classified according to Article 669.05(b)(1) or 669.05(c) where field screening is not required.

Field screening shall be performed with either a photoionization detector (PID) (minimum 10.6eV lamp) or a flame ionization detector (FID), and other equipment as appropriate, to monitor for potential contaminants associated with regulated substances. The PID or FID shall be calibrated on-site, and background level readings taken and recorded daily, and as field and weather conditions change. Field screen readings on the PID or FID in excess of background levels indicates the potential presence of regulated substances requiring handling as a non-special waste, special waste, or hazardous waste. PID or FID readings may be used as the basis of increasing the limits of removal with the approval of the Engineer but shall in no case be used to decrease the limits.

669.05 Regulated Substances Management and Disposal. The management and disposal of soil and/or groundwater containing regulated substances shall be according to the following:

(a) Soil Analytical Results Exceed Most Stringent MAC. When the soil analytical results indicate detected levels exceed the most stringent maximum allowable concentration (MAC) for chemical constituents in soil established pursuant to Subpart F of 35 Ill. Adm. Code 1100.605, the soil shall be managed as follows:

(1) When analytical results indicate inorganic chemical constituents exceed the most stringent MAC, but still considered within area background levels by the Engineer, the excavated soil can be utilized within the right-of-way as embankment or fill, when suitable. If the soils cannot be utilized within the right-of-way, they shall be managed and disposed of at a landfill as a non-special waste.

(2) When analytical results indicate inorganic chemical constituents exceed the most stringent MAC but do not exceed the MAC for a Metropolitan Statistical Area (MSA) County identified in 35 Ill. Admin. Code 742 Appendix A. Table G, the excavated soil can be utilized within the right-of-way as embankment or fill, when suitable, or managed and disposed of at a clean construction and demolition debris (CCDD) facility or an uncontaminated soil fill operation (USFO) within an MSA County provided the pH of the soil is within the range of 6.25 - 9.0, inclusive.

(3) When analytical results indicate chemical constituents exceed the most stringent MAC but do not exceed the MAC for an MSA County excluding Chicago, or the MAC within the Chicago corporate limits, the excavated soil can be utilized within the right-of-way as embankment or fill, when suitable, or managed and disposed of off-site at a CCDD facility or an USFO within an MSA County excluding Chicago or within the Chicago corporate limits provided the pH of the soil is within the range of 6.25 - 9.0, inclusive.

(4) When analytical results indicate chemical constituents exceed the most stringent MAC but do not exceed the MAC for an MSA County excluding Chicago, the excavated soil can be utilized within the right-of-way as embankment or fill, when suitable, or managed and disposed of off-site at a CCDD facility or an USFO within an MSA County excluding Chicago provided the pH of the soil is within the range of 6.25 - 9.0, inclusive.

(5) When the Engineer determines soil cannot be managed according to Articles 669.05(a)(1) through (a)(4) above and the materials do not contain special waste or hazardous waste, as determined by the Engineer, the soil shall be managed and disposed of at a landfill as a non-special waste.

(6) When analytical results indicate soil is hazardous by characteristic or listing pursuant to 35 Ill. Admin. Code 721, contains radiological constituents, or the Engineer otherwise determines the soil cannot be managed according to Articles 669.05(a)(1)

through (a)(5) above, the soil shall be managed and disposed of off-site as a special waste or hazardous waste as applicable.

(b) Soil Analytical Results Do Not Exceed Most Stringent MAC. When the soil analytical results indicate that detected levels do not exceed the most stringent MAC, the excavated soil can be utilized within the right-of-way as embankment or fill, when suitable, or managed and disposed of off-site according to Article 202.03. However, the excavated soil cannot be taken to a CCDD facility or an USFO for any of the following reasons.

(1) The pH of the soil is less than 6.25 or greater than 9.0.

(2) The soil exhibited PID or FID readings in excess of background levels.

(c) Soil Analytical Results Exceed Most Stringent MAC but Do Not Exceed Tiered Approach to Corrective Action Objectives (TACO) Residential. When the soil analytical results indicate that detected levels exceed the most stringent MAC but do not exceed TACO Tier 1 Soil Remediation Objectives for Residential Properties pursuant to 35 Ill. Admin. Code 742 Appendix B Table A, the excavated soil can be utilized within the right-of-way as embankment or fill, when suitable, or managed and disposed of off-site according to Article 202.03. However, the excavated soil cannot be taken to a CCDD facility or an USFO.

(d) Groundwater. When groundwater analytical results indicate the detected levels are above Appendix B, Table E of 35 Ill. Admin. Code 742, the most stringent Tier 1 Groundwater Remediation Objectives for Groundwater Component of the Groundwater Ingestion Route for Class 1 groundwater, the groundwater shall be managed off-site as a special waste or hazardous waste as applicable. Special waste groundwater shall be containerized and trucked to an off-site treatment facility, or may be discharged to a sanitary sewer or combined sewer when permitted by the local sewer authority. Groundwater discharged to a sanitary sewer or combined sewer shall be pre-treated to remove particulates and measured with a calibrated flow meter to comply with applicable discharge limits. A copy of the permit shall be provided to the Engineer prior to discharging groundwater to the sanitary sewer or combined sewer.

Groundwater encountered within trenches may be managed within the trench and allowed to infiltrate back into the ground. If the groundwater cannot be managed within the trench, it may be discharged to a sanitary sewer or combined sewer when permitted by the local sewer authority, or it shall be containerized and trucked to an off-site treatment facility as a special waste or hazardous waste. The Contractor is prohibited from discharging groundwater within the trench through a storm sewer. The Contractor shall install backfill plugs within the area of groundwater contamination.

One backfill plug shall be placed down gradient to the area of groundwater contamination. Backfill plugs shall be installed at intervals not to exceed 50 ft (15 m). Backfill plugs are to be 4 ft (1.2 m) long, measured parallel to the trench, full trench width and depth. Backfill plugs shall not have any fine aggregate bedding or backfill, but shall be entirely cohesive

soil or any class of concrete. The Contractor shall provide test data that the material has a permeability of less than 10^{-7} cm/sec according to ASTM D 5084, Method A or per another test method approved by the Engineer.

The Contractor shall use due care when transferring contaminated material from the area of origin to the transporter. Should releases of contaminated material to the environment occur (i.e., spillage onto the ground, etc.), the Contractor shall clean-up spilled material and place in the appropriate storage containers as previously specified. Clean-up shall include, but not be limited to, sampling beneath the material staging area to determine complete removal of the spilled material.

The Contractor shall provide engineered barriers, when required, and shall include materials sufficient to completely line excavation surfaces, including sloped surfaces, bottoms, and sidewall faces, within the areas designated for protection.

The Contractor shall obtain all documentation including any permits and/or licenses required to transport the material containing regulated substances to the disposal facility. The Contractor shall coordinate with the Engineer on the completion of all documentation. The Contractor shall make all arrangements for collection and analysis of landfill acceptance testing. The Contractor shall coordinate waste disposal approvals with the disposal facility.

The Contractor shall provide the Engineer with all transport-related documentation within two days of transport or receipt of said document(s). For management of special or hazardous waste, the Contractor shall provide the Engineer with documentation that the Contractor is operating with a valid Illinois special waste transporter permit at least two weeks before transporting the first load of contaminated material.

Transportation and disposal of material classified according to Article 669.05(a)(5) or 669.05(a)(6) shall be completed each day so that none of the material remains on-site by the close of business, except when temporary staging has been approved.

Any waste generated as a special or hazardous waste from a non-fixed facility shall be manifested off-site using the Department's county generator number provided by the Bureau of Design and Environment. An authorized representative of the Department shall sign all manifests for the disposal of the contaminated material and confirm the Contractor's transported volume. Any waste generated as a non-special waste may be managed off-site without a manifest, a special waste transporter, or a generator number.

The Contractor shall select a landfill permitted for disposal of the contaminant within the State of Illinois. The Department will review and approve or reject the facility proposed by the Contractor to use as a landfill. The Contractor shall verify whether the selected disposal facility is compliant with those applicable standards as mandated by their permit and whether the disposal facility is presently, has previously been, or has never been, on the United States Environmental Protection Agency (U.S. EPA) National Priorities List or the Resource Conservation and Recovery Act (RCRA) List of Violating Facilities. The use of a Contractor selected landfill shall in no manner delay the construction schedule or alter the Contractor's responsibilities as set forth.

669.06 Non-Special Waste Certification. An authorized representative of the Department shall sign and date all non-special waste certifications. The Contractor shall be responsible for providing the Engineer with the required information that will allow the Engineer to certify the waste is not a special waste.

(a) Definition. A waste is considered a non-special waste as long as it is not:

(1) a potentially infectious medical waste;

(2) a hazardous waste as defined in 35 Ill. Admin. Code 721;

(3) an industrial process waste or pollution control waste that contains liquids, as determined using the paint filter test set forth in subdivision (3)(A) of subsection (m) of 35 Ill. Admin. Code 811.107;

(4) a regulated asbestos-containing waste material, as defined under the National Emission Standards for Hazardous Air Pollutants in 40 CFR Part 61.141;

(5) a material containing polychlorinated biphenyls (PCB's) regulated pursuant to 40 CFR Part 761;

(6) a material subject to the waste analysis and recordkeeping requirements of 35 Ill. Admin. Code 728.107 under land disposal restrictions of 35 Ill. Admin. Code 728;

(7) a waste material generated by processing recyclable metals by shredding and required to be managed as a special waste under Section 22.29 of the Environmental Protection Act; or

(8) an empty portable device or container in which a special or hazardous waste has been stored, transported, treated, disposed of, or otherwise handled.

(b) Certification Information. All information used to determine the waste is not a special waste shall be attached to the certification. The information shall include but not be limited to:

(1) the means by which the generator has determined the waste is not a hazardous waste;

(2) the means by which the generator has determined the waste is not a liquid;

(3) if the waste undergoes testing, the analytic results obtained from testing, signed and dated by the person responsible for completing the analysis;

(4) if the waste does not undergo testing, an explanation as to why no testing is needed;

(5) a description of the process generating the waste; and

(6) relevant material safety data sheets.

669.07 Temporary Staging. Soil classified according to Articles 669.05(a)(2), (b)(1), or (c) may be temporarily staged at the Contractor's option. Soil classified according to Articles 669.05(a)(1), (a)(3), (a)(4), (a)(5), (a)(6), or (b)(2) shall be managed and disposed of without temporary staging to the greatest extent practicable. If circumstances beyond the Contractor's control require temporary staging of these latter materials, the Contractor shall request approval from the Engineer in writing.

Temporary staging shall be accomplished within the right-of-way and the Contractor's means and methods shall be described in the approved or amended RSPCP. Staging areas shall not be located within 200 feet (61 m) of a public or private water supply well; nor within 100 feet (30 m) of sensitive environmental receptor areas, including wetlands, rivers, streams, lakes, or designated habitat zones.

The method of staging shall consist of containerization or stockpiling as applicable for the type, classification, and physical state (i.e., liquid, solid, semisolid) of the material. Materials of different classifications shall be staged separately with no mixing or co-mingling.

When containers are used, the containers and their contents shall remain intact and inaccessible to unauthorized persons until the manner of disposal is determined. The Contractor shall be responsible for all activities associated with the storage containers including, but not limited to, the procurement, transport, and labeling of the containers. The Contractor shall not use a storage container if visual inspection of the container reveals the presence of free liquids or other substances that could cause the waste to be reclassified as a hazardous or special waste.

When stockpiles are used, they shall be covered with a minimum 20-mil plastic sheeting or tarps secured using weights or tie-downs. Perimeter berms or diversionary trenches shall be provided to contain and collect for disposal any water that drains from the soil. Stockpiles shall be managed to prevent or reduce potential dust generation.

When staging non-special waste, special waste, or hazardous waste, the following additional requirements shall apply:

(a) Non-Special Waste. When stockpiling soil classified according to Article 669.05(a)(1) or 669.05(a)(5), an impermeable surface barrier between the materials and the ground surface shall be installed. The impermeable barrier shall consist of a minimum 20-mil plastic liner material and the surface of the stockpile area shall be clean and free of debris prior to placement of the liner. Measures shall also be taken to limit or discourage access to the staging area.

(b) Special Waste and Hazardous Waste. Soil classified according to Article 669.05(a)(6) shall not be stockpiled but shall be containerized immediately upon generation in containers, tanks or containment buildings as defined by RCRA, Toxic Substances Control

Act (TSCA), and other applicable State or local regulations and requirements, including 35 Ill. Admin. Code Part 722, Standards Applicable to Generators of Hazardous Waste.

The staging area(s) shall be enclosed (by a fence or other structure) to restrict direct access to the area, and all required regulatory identification signs applicable to a staging area containing special waste or hazardous waste shall be deployed.

Storage containers shall be placed on an all-weather gravel-packed, asphalt, or concrete surface. Containers shall be in good condition and free of leaks, large dents, or severe rusting, which may compromise containment integrity. Containers must be constructed of, or lined with, materials that will not react or be otherwise incompatible with the hazardous or special waste contents. Containers used to store liquids shall not be filled more than 80 percent of the rated capacity. Incompatible wastes shall not be placed in the same container or comingled.

All containers shall be legibly labeled and marked using pre-printed labels and permanent marker in accordance with applicable regulations, clearly showing the date of waste generation, location and/or area of waste generation, and type of waste. The Contractor shall place these identifying markings on an exterior side surface of the container.

Storage containers shall be kept closed, and storage pads covered, except when access is needed by authorized personnel.

Special waste and hazardous waste shall be transported and disposed within 90 days from the date of generation.

669.08 Underground Storage Tank Removal. For the purposes of this section, an underground storage tank (UST) includes the underground storage tank, piping, electrical controls, pump island, vent pipes and appurtenances.

Prior to removing an UST, the Engineer shall determine whether the Department is considered an "owner" or "operator" of the UST as defined by the UST regulations (41 Ill. Adm. Code Part 176). Ownership of the UST refers to the Department's owning title to the UST during storage, use or dispensing of regulated substances. The Department may be considered an "operator" of the UST if it has control of, or has responsibility for, the daily operation of the UST. The Department may however voluntarily undertake actions to remove an UST from the ground without being deemed an "operator" of the UST.

In the event the Department is deemed not to be the "owner" or "operator" of the UST, the OSFM removal permit shall reflect who was the past "owner" or "operator" of the UST. If the "owner" or "operator" cannot be determined from past UST registration documents from OSFM, then the OSFM removal permit will state the "owner" or "operator" of the UST is the Department. The Department’s Office of Chief Counsel (OCC) will review all UST removal permits prior to submitting any removal permit to the OSFM. If the Department is not the “owner” or “operator” of the UST then it will not register the UST or pay any registration fee.

The Contractor shall be responsible for obtaining permits required for removing the UST, notification to the OSFM, using an OSFM certified tank contractor, removal and disposal of the UST and its contents, and preparation and submittal of the OSFM Site Assessment Report in accordance with 41 Ill. Admin. Code Part 176.330.

The Contractor shall contact the Engineer and the OSFM's office at least 72 hours prior to removal to confirm the OSFM inspector's presence during the UST removal. Removal, transport, and disposal of the UST shall be according to the applicable portions of the latest revision of the "American Petroleum Institute (API) Recommended Practice 1604".

The Contractor shall collect and analyze tank content (sludge) for disposal purposes. The Contractor shall remove as much of the regulated substance from the UST system as necessary to prevent further release into the environment. All contents within the tank shall be removed, transported and disposed of, or recycled. The tank shall be removed and rendered empty according to IEPA definition.

The Contractor shall collect soil samples from the bottom and sidewalls of the excavated area in accordance with 35 Ill. Admin. Code Part 734.210(h) after the required backfill has been removed during the initial response action, to determine the level of contamination remaining in the ground, regardless if a release is confirmed or not by the OSFM on-site inspector.

In the event the UST is designated a leaking underground storage tank (LUST) by the OSFM's inspector, or confirmation by analytical results, the Contractor shall notify the Engineer and the District Environmental Studies Unit (DESU). Upon confirmation of a release of contaminants and notifications to the Engineer and DESU, the Contractor shall report the release to the Illinois Emergency Management Agency (IEMA) (e.g., by telephone or electronic mail) and provide them with whatever information is available ("owner" or "operator" shall be stated as the past registered "owner" or "operator", or the IDOT District in which the tank is located and the DESU Manager).

The Contractor shall perform the following initial response actions if a release is indicated by the OSFM inspector:

(a) Take immediate action to prevent any further release of the regulated substance to the environment, which may include removing, at the Engineer's discretion, and disposing of up to 4 ft (1.2 m) of the contaminated material, as measured from the outside dimension of the tank;

(b) Identify and mitigate fire, explosion and vapor hazards;

(c) Visually inspect any above ground releases or exposed below ground releases and prevent further migration of the released substance into surrounding soils and groundwater; and

(d) Continue to monitor and mitigate any additional fire and safety hazards posed by vapors and free product that have migrated from the tank excavation zone and entered into subsurface structures (such as sewers or basements).

The tank excavation shall be backfilled according to applicable portions of Sections 205, 208, and 550 with a material that will compact and develop stability. All uncontaminated concrete and soil removed during tank extraction may be used to backfill the excavation, at the discretion of the Engineer.

After backfilling the excavation, the site shall be graded and cleaned.

669.09 Regulated Substances Final Construction Report. Not later than 90 days after completing this work, the Contractor shall submit a "Regulated Substances Final Construction Report (RSFCR)" to the Engineer using form BDE 2733 and required attachments. The form shall be signed by an Illinois licensed Professional Engineer or Professional Geologist.

669.10 Method of Measurement. Non-special waste, special waste, and hazardous waste soil will be measured for payment according to Article 202.07(b) when performing earth excavation, Article 502.12(b) when excavating for structures, or by computing the volume of the trench using the maximum trench width permitted and the actual depth of the trench.

Groundwater containerized and transported off-site for management, storage, and disposal will be measured for payment in gallons (liters).

Backfill plugs will be measured in cubic yards (cubic meters) in place, except the quantity for which payment will be made shall not exceed the volume of the trench, as computed by using the maximum width of trench permitted by the Specifications and the actual depth of the trench, with a deduction for the volume of the pipe.

Engineered Barriers will be measured for payment in square yards (square meters).

669.11 Basis of Payment. The work of preparing, submitting and administering a Regulated Substances Pre-Construction Plan will be paid for at the contract lump sum price for REGULATED SUBSTANCES PRE-CONSTRUCTION PLAN.

Regulated substances monitoring, including completion of form BDE 2732 for each day of work, will be paid for at the contract unit price per calendar day, or fraction thereof to the nearest 0.5 calendar day, for REGULATED SUBSTANCES MONITORING.

The installation of engineered barriers will be paid for at the contract unit price per square yard (square meter) for ENGINEERED BARRIER.

The work of UST removal, soil excavation, soil and content sampling, the management of excavated soil and UST content, and UST disposal, will be paid for at the contract unit price per each for UNDERGROUND STORAGE TANK REMOVAL.

The transportation and disposal of soil and other materials from an excavation determined to be contaminated will be paid for at the contract unit price per cubic yard (cubic meter) for

NON-SPECIAL WASTE DISPOSAL, SPECIAL WASTE DISPOSAL, or HAZARDOUS WASTE DISPOSAL.

The transportation and disposal of groundwater from an excavation determined to be contaminated will be paid for at the contract unit price per gallon (liter) for SPECIAL WASTE GROUNDWATER DISPOSAL or HAZARDOUS WASTE GROUNDWATER DISPOSAL. When groundwater is discharged to a sanitary or combined sewer by permit, the cost will be paid for according to Article 109.05.

Backfill plugs will be paid for at the contract unit price per cubic yard (cubic meter) for BACKFILL PLUGS.

Payment for temporary staging of soil classified according to Articles 669.05(a)(1), (a)(3), (a)(4), (a)(5), (a)(6), or (b)(2) will be paid for according to Article 109.04. The Department will not be responsible for any additional costs incurred, if mismanagement of the staging area, storage containers, or their contents by the Contractor results in excess cost expenditure for disposal or other material management requirements.

Payment for accumulated stormwater removal and disposal will be according to Article 109.04. Payment will only be allowed if appropriate stormwater and erosion control methods were used.

Payment for decontamination, labor, material, and equipment for monitoring areas beyond the specified areas, with the Engineer's prior written approval, will be according to Article 109.04.

When the waste material for disposal requires sampling for landfill disposal acceptance, the samples shall be analyzed for TCLP VOCs, SVOCs, RCRA metals, pH, ignitability, and paint filter test. The analysis will be paid for at the contract unit price per each for SOIL DISPOSAL ANALYSIS using EPA Methods 1311 (extraction), 8260B for VOCs, 8270C for SVOCs, 6010B and 7470A for RCRA metals, 9045C for pH, 1030 for ignitability, and 9095A for paint filter.

The work of preparing, submitting and administering a Regulated Substances Final Construction Report will be paid for at the contract lump sum price REGULATED SUBSTANCES FINAL CONSTRUCTION REPORT."

80407

SILT FENCE, INLET FILTERS, GROUND STABILIZATION AND RIPRAP FILTER FABRIC (BDE)

Effective: November 1, 2019
Revised: April 1, 2020

Revise Article 280.02(m) and add Article 280.02(n) so the Standard Specifications read:

"(m) Above Grade Inlet Filter (Fitted)..... 1081.15(j)
(n) Above Grade Inlet Filter (Non-Fitted).....1081.15(k)"

Revise the last sentence of the first paragraph in Article 280.04(c) of the Standard Specifications to read:

"The protection shall be constructed with hay or straw bales, silt filter fence, above grade inlet filters (fitted and non-fitted), or inlet filters.

Revise the first sentence of the second paragraph in Article 280.04(c) of the Standard Specifications to read:

"When above grade inlet filters (fitted and non-fitted) are specified, they shall be of sufficient size to completely span and enclose the inlet structure."

Revise Article 1080.02 of the Standard Specifications to read:

"**1080.02 Geotextile Fabric.** The fabric for silt filter fence shall consist of woven fabric meeting the requirements of AASHTO M 288 for unsupported silt fence.

The fabric for ground stabilization shall consist of woven yarns or nonwoven filaments of polyolefins or polyesters. Woven fabrics shall be Class 2 and nonwoven fabrics shall be Class 1 according to AASHTO M 288.

The physical properties for silt fence and ground stabilization fabrics shall be according to the following.

PHYSICAL PROPERTIES			
	Silt Fence Woven [1/]	Ground Stabilization Woven [2/]	Ground Stabilization Nonwoven [2/]
Grab Strength, lb (N) [3/] ASTM D 4632	123 (550) MD 101 (450) XD	247 (1100) min. [4/]	202 (900) min. [4/]
Elongation/Grab Strain, % ASTM D 4632 [4/]	49 max.	49 max.	50 min.
Trapezoidal Tear Strength, lb (N) ASTM D 4533 [4/]	--	90 (400) min.	79 (350) min.

Puncture Strength, lb (N) ASTM D 6241 [4/]	--	494 (2200) min.	433 (1925) min.
Apparent Opening Size, Sieve No. (mm) ASTM D 4751 [5/]	30 (0.60) max.	40 (0.43) max.	40 (0.43) max.
Permittivity, sec^{-1} ASTM D 4491	0.05 min.		
Ultraviolet Stability, % retained strength after 500 hours of exposure ASTM D 4355	70 min.	50 min.	50 min.

1/ NTPEP results or manufacturer's certification to meet test requirements.

2/ NTPEP results to meet test requirements. Manufacturer shall have public release status and current reports on laboratory results in Test Data of NTPEP's DataMine.

3/ MD = Machine direction. XD = Cross-machine direction.

4/ Values represent the minimum average roll value (MARV) in the weaker principle direction, MD or XD.

5/ Values represent the maximum average roll value."

Revise Article 1080.03 of the Standard Specifications to read:

"**1080.03 Filter Fabric.** The filter fabric shall consist of woven yarns or nonwoven filaments of polyolefins or polyesters. Woven fabrics shall be Class 3 for riprap gradations RR 4 and RR 5, and Class 2 for RR 6 and RR 7 according to AASHTO M 288. Woven slit film geotextiles (i.e. geotextiles made from yarns of a flat, tape-like character) shall not be permitted. Nonwoven fabrics shall be Class 2 for riprap gradations RR 4 and RR 5, and Class 1 for RR 6 and RR 7 according to AASHTO M 288. After forming, the fabric shall be processed so that the yarns or filaments retain their relative positions with respect to each other. The fabric shall be new and undamaged.

The filter fabric shall be manufactured in widths of not less than 6 ft (2 m). Sheets of fabric may be sewn together with thread of a material meeting the chemical requirements given for the yarns or filaments to form fabric widths as required. The sheets of filter fabric shall be sewn together at the point of manufacture or another approved location.

The filter fabric shall be according to the following.

PHYSICAL PROPERTIES [1/]				
	Gradation Nos. RR 4 & RR 5		Gradation Nos. RR 6 & RR 7	
	Woven	Nonwoven	Woven	Nonwoven
Grab Strength, lb (N) ASTM D 4632 [2/]	180 (800) min.	157 (700) min.	247 (1100) min.	202 (900) min.
Elongation/Grab Strain, % ASTM D 4632 [2/]	49 max.	50 min.	49 max.	50 min.
Trapezoidal Tear Strength, lb (N) ASTM D 4533 [2/]	67 (300) min.	56 (250) min.	90 (400) min.	79 (350) min.
Puncture Strength, lb (N) ASTM D 6241 [2/]	370 (1650) min.	309 (1375) min.	494 (2200) min.	433 (1925) min.
Ultraviolet Stability, % retained strength after 500 hours of exposure - ASTM D 4355	50 min.			

1/ NTPEP results to meet test requirements. Manufacturer shall have public release status and current reports on laboratory results in Test Data of NTPEP's DataMine.

2/ Values represent the minimum average roll value (MARV) in the weaker principle direction [machine direction (MD) or cross-machine direction (XD)].

As determined by the Engineer, the filter fabric shall meet the requirements noted in the following after an onsite investigation of the soil to be protected.

Soil by Weight (Mass) Passing the No. 200 sieve (75 µm), %	Apparent Opening Size, Sieve No. (mm) - ASTM D 4751 [1/]	Permittivity, sec^{-1} ASTM D 4491
49 max.	60 (0.25) max.	0.2 min.
50 min.	70 (0.22) max.	0.1 min.

1/ Values represent the maximum average roll value."

Revise Article 1081.15(h)(3)a of the Standard Specifications to read:

"a. Inner Filter Fabric Bag. The inner filter fabric bag shall be constructed of woven yarns or nonwoven filaments made of polyolefins or polyesters with a minimum silt and debris capacity of 2.0 cu ft (0.06 cu m). Woven fabric shall be Class 3 and nonwoven fabric shall be Class 2 according to AASHTO M 288. The fabric bag shall be according to the following.

PHYSICAL PROPERTIES		
	Woven	Nonwoven
Grab Strength, lb (N) ASTM D 4632 1/	180 (800) min.	157 (700) min.
Elongation/Grab Strain, % ASTM D 4632 1/	49 max.	50 min.
Trapezoidal Tear Strength, lb (N) ASTM D 4533 1/	67 (300) min.	56 (250) min.
Puncture Strength, lb (N) ASTM D 6241 1/	370 (1650) min.	309 (1375) min.
Apparent Opening Size, Sieve No. (mm) ASTM D 4751 2/	60 (0.25) max.	
Permittivity, sec^{-1} ASTM D 4491	2.0 min.	
Ultraviolet Stability, % retained strength after 500 hours of exposure – ASTM D 4355	70 min.	

1/ Values represent the minimum average roll value (MARV) in the weaker principle direction [machine direction (MD) or cross-machine direction (XD)].

2/ Values represent the maximum average roll value."

Revise Article 1081.15(i)(1) of the Standard Specifications to read:

"(i) Urethane Foam/Geotextile. Urethane foam/geotextile shall be triangular shaped having a minimum height of 10 in. (250 mm) in the center with equal sides and a minimum 20 in. (500 mm) base. The triangular shaped inner material shall be a low density urethane foam. The outer geotextile fabric cover shall consist of woven yarns or nonwoven filaments made of polyolefins or polyesters placed around the inner material and shall extend beyond both sides of the triangle a minimum of 18 in. (450 mm). Woven filter fabric shall be Class 3 and nonwoven filter fabric shall be Class 2 according to AASHTO M 288.

(1) The geotextile shall meet the following properties.

PHYSICAL PROPERTIES		
	Woven	Nonwoven
Grab Strength, lb (N) ASTM D 4632 1/	180 (800) min.	157 (700) min.
Elongation/Grab Strain, % ASTM D 4632 1/	49 max.	50 min.
Trapezoidal Tear Strength, lb (N) ASTM D 4533 1/	67 (300) min.	56 (250) min.
Puncture Strength, lb (N) ASTM D 6241 1/	370 (1650) min.	309 (1375) min.

Apparent Opening Size, Sieve No. (mm) ASTM D 4751 2/	30 (0.60) max.
Permittivity, sec^{-1} ASTM D 4491	2.0 min.
Ultraviolet Stability, % retained strength after 500 hours of exposure – ASTM D 4355	70 min.

1/ Values represent the minimum average roll value (MARV) in the weaker principle direction [machine direction (MD) or cross-machine direction (XD)].

2/ Values represent the maximum average roll value."

Add the following to Article 1081.15(i) of the Standard Specifications.

"(3) Certification. The manufacturer shall furnish a certificate with each shipment of urethane foam/geotextile assemblies stating the amount of product furnished and that the material complies with these requirements."

Revise the title and first sentence of Article 1081.15(j) of the Standards Specifications to read:

"(j) Above Grade Inlet Filters (Fitted). Above grade inlet filters (fitted) shall consist of a rigid polyethylene frame covered with a fitted geotextile filter fabric."

Revise Article 1081.15(j)(2) of the Standard Specifications to read:

(2) Fitted Geotextile Filter Fabric. The fitted geotextile filter fabric shall consist of woven yarns or nonwoven filaments made of polyolefins or polyesters. Woven filter fabric shall be Class 3 and nonwoven filter fabric shall be Class 2 according to AASHTO M 288. The filter shall be fabricated to provide a direct fit to the frame. The top of the filter shall integrate a coarse screen with a minimum apparent opening size of 1/2 in. (13 mm) to allow large volumes of water to pass through in the event of heavy flows. The filter shall have integrated anti-buoyancy pockets capable of holding a minimum of 3.0 cu ft (0.08 cu m) of stabilization material. Each filter shall have a label with the following information sewn to or otherwise permanently adhered to the outside: manufacturer's name, product name, and lot, model, or serial number. The fitted geotextile filter fabric shall be according to the table in Article 1081.15(h)(3)a above."

Add Article 1081.15(k) to the Standard Specifications to read:

"(k) Above Grade Inlet Filters (Non-Fitted). Above grade inlet filters (non-fitted) shall consist of a geotextile fabric surrounding a metal frame. The frame shall consist of either a) a circular cage formed of welded wire mesh, or b) a collapsible aluminum frame, as described below.

(1) Frame Construction.

a) Welded Wire Mesh Frame. The frame shall consist of 6 in. x 6 in. (150 mm x 150 mm) welded wire mesh formed of #10 gauge (3.42 mm) steel conforming to ASTM A 185. The mesh shall be 30 in. (750 mm) tall and formed into a 42 in. (1.05 m) minimum diameter cylinder.

b) Collapsible Aluminum Frame. The collapsible aluminum frame shall consist of grade 6036 aluminum. The frame shall have anchor lugs that attach it to the inlet grate, which shall resist movement from water and debris. The collapsible joints of the frame shall have a locking device to secure the vertical members in place, which shall prevent the frame from collapsing while under load from water and debris.

(2) Geotextile Fabric. The geotextile fabric shall consist of woven yarns or nonwoven filaments made of polyolefins or polyesters. The woven filter fabric shall be a Class 3 and the nonwoven filter fabric shall be a Class 2 according to AASHTO M 288. The geotextile fabric shall be according to the table in Article 1081.15(h)(3)a above.

(3) Geotechnical Fabric Attachment to the Frame.

a) Welded Wire Mesh Frame. The woven or nonwoven geotextile fabric shall be wrapped 3 in. (75 mm) over the top member of a 6 in. x 6 in. (150 mm x 150 mm) welded wire mesh frame and secured with fastening rings constructed of wire conforming to ASTM A 641, A 809, A 370, and A 938 at 6 in. (150 mm) on center. The fastening rings shall penetrate both layers of geotextile and securely close around the steel mesh. The geotextile shall be secured to the sides of the welded wire mesh with fastening rings at a spacing of 1 per sq ft (11 per sq m) and securely close around a steel member.

b) Collapsible Aluminum Frame. The woven or nonwoven fabric shall be secured to the aluminum frame along the top and bottom of the frame perimeter with strips of aluminum secured to the perimeter member, such that the anchoring system provides a uniformly distributed stress throughout the geotechnical fabric.

(4) Certification. The manufacturer shall furnish a certificate with each shipment of above grade inlet filter assemblies stating the amount of product furnished and that the material complies with these requirements."

STEEL PLATE BEAM GUARDRAIL MANUFACTURING (BDE)

Effective: January 1, 2019

Revise the first three paragraphs of Article 1006.25 of the Standard Specifications to read:

"**1006.25 Steel Plate Beam Guardrail.** Steel plate beam guardrail, including bolts, nuts, and washers, shall be according to AASHTO M 180. The guardrail shall be Class A, with a Type II galvanized coating.

Steel plates for mounting guardrail on existing culverts shall be according to AASHTO M 270 Grade 36 (M 270M Grade 250) and zinc coated according to AASHTO M 111.

The Department will accept guardrail based on the "Brand Registration and Guarantee" requirements of AASHTO M 180 and the manufacturer shall be listed as compliant through the NTPEP Program. The Department will maintain a qualified product list."

80408

SUBCONTRACTOR MOBILIZATION PAYMENTS (BDE)

Effective: November 2, 2017
Revised: April 1, 2019

Replace the second paragraph of Article 109.12 of the Standard Specifications with the following:

"This mobilization payment shall be made at least seven days prior to the subcontractor starting work. The amount paid shall be at the following percentage of the amount of the subcontract reported on form BC 260A submitted for the approval of the subcontractor's work.

Value of Subcontract Reported on Form BC 260A	Mobilization Percentage
Less than $10,000	25%
$10,000 to less than $20,000	20%
$20,000 to less than $40,000	18%
$40,000 to less than $60,000	16%
$60,000 to less than $80,000	14%
$80,000 to less than $100,000	12%
$100,000 to less than $250,000	10%
$250,000 to less than $500,000	9%
$500,000 to $750,000	8%
Over $750,000	7%"

80391

TRAFFIC CONTROL DEVICES - CONES (BDE)

Effective: January 1, 2019

Revise Article 701.15(a) of the Standard Specifications to read:

"(a) Cones. Cones are used to channelize traffic. Cones used to channelize traffic at night shall be reflectorized; however, cones shall not be used in nighttime lane closure tapers or nighttime lane shifts."

Revise Article 1106.02(b) of the Standard Specifications to read:

"(b) Cones. Cones shall be predominantly orange. Cones used at night that are 28 to 36 in. (700 to 900 mm) in height shall have two white circumferential stripes. If non-reflective spaces are left between the stripes, the spaces shall be no more than 2 in. (50mm) in width. Cones used at night that are taller than 36 in. (900 mm) shall have a minimum of two white and two fluorescent orange alternating, circumferential stripes with the top stripe being fluorescent orange. If non-reflective spaces are left between the stripes, the spaces shall be no more than 3 in. (75 mm) in width.

The minimum weights for the various cone heights shall be 4 lb for 18 in. (2 kg for 450 mm), 7 lb for 28 in. (3 kg for 700 mm), and 10 lb for 36 in. (5 kg for 900 mm) with a minimum of 60 percent of the total weight in the base. Cones taller than 36 in. shall be weighted per the manufacturer's specifications such that they are not moved by wind or passing traffic."

80409

WORKING DAYS (BDE)

Effective: January 1, 2002

The Contractor shall complete the work within 40 working days.

80071

DEPARTMENT OF THE ARMY
CORPS OF ENGINEERS, ROCK ISLAND DISTRICT
PO BOX 2004 CLOCK TOWER BUILDING
ROCK ISLAND, ILLINOIS 61204-2004

REPLY TO
ATTENTION OF

June 3, 2020

Operations Division

RECEIVED
JUN 09 2020
TAZEWELL COUNTY
HIGHWAY DEPT.

SUBJECT: CEMVR-OD-P-2019-0329

Mr. Craig Fink
Tazewell County Highway Department
21308 IL Rte. 9
Tremont, Illinois 61568

Dear Mr. Fink:

Our office has reviewed your application received May 27, 2020, concerning the proposed replacement of the bridge located on Prairie Road over Indian Creek in Section 28, Township 23 North, Range 3 West, Tazewell County, Illinois.

Your project is authorized under Nationwide Permit No. 14, provided you meet the Nationwide Permit terms and conditions which are contained in the enclosed Fact Sheet No. 8(IL) including the Illinois Regional Conditions which are also included in the Fact Sheet, and any special conditions that have been included in this nationwide permit verification letter. The Corps has made a determination of no effect on federally threatened and endangered species or critical habitat. The decision regarding this action is based on information found in the administrative record, which documents the District's decision-making process, the basis for the decision, and the final decision.

Please contact our office if the project plans change and there are different impacts caused by dredged or fill material into Corps' regulated waters. This may require modification of your Department of the Army 404 authorization.

This verification is valid until March 18, 2022, unless the nationwide permit is modified, reissued or revoked. It is your responsibility to remain informed of changes to the nationwide permit program. We will issue a public notice announcing any changes if and when they occur. Furthermore, if you commence or are under contract to commence this activity before the date the nationwide permit is modified or revoked, you will have twelve months from this date to complete your activity under the present terms and conditions of this nationwide permit.

This authorization does not eliminate the requirement that you must still obtain other applicable Federal, state, and local permits. If you have not already coordinated your project with the ILDNR, please contact them by telephone 217/782-6302 to determine if a floodplain development permit is required for your project. You may contact the IEPA Facility Evaluation Unit at 217/782-3397 to determine whether additional authorizations are required from the IEPA. Please send any electronic correspondence to EPA.401.bow@illinois.gov.

You are required to complete and return the enclosed "Completed Work Certification" form upon completion of your project in accordance with General Condition No. 30 of the nationwide permits.

Should you have any questions, please contact our Regulatory Branch by letter, or telephone Brant Vollman at 309/794-5380.

Sincerely,

Digitally signed by POPKIN.TREVOR.EUGENE.1367073493
Date: 2020.06.03 11:04:16 -05'00'

Trevor Popkin
Chief, Illinois/Missouri Permit Section
Regulatory Branch

When the structure(s) or work authorized by this nationwide permit are still in existence at the time the property is transferred, the terms and conditions of this nationwide permit, including any special conditions, will continue to be binding on the new owner(s), of the property. To validate the transfer of this nationwide permit and the liabilities associated with compliance with its terms and conditions, have the transferee sign and date below.

_____ _____

Transferee Date

Copies Furnished:

w/o enclosures:

Mr. William Milner, P.E.
Section Chief - Downstate Regulatory Programs
Illinois Department of Natural Resources
Office of Water Resources
1 Natural Resources Way
Springfield, Illinois 62702
bill.milner@illinois.gov (email)

Mr. Darin LeCrone, P.E.
Manager, Permit Section, 15
Division of Water Pollution Control
Illinois Environmental Protection Agency
1021 North Grand Avenue East
PO Box 19276
Springfield, Illinois 62794-9276
darin.lecrone@Illinois.gov (email)

Mr. Cory Chamberlain
WHKS & Co.
3695 6th Street Frontage Road West, Suite A
Springfield, Illinois 62711

COMPLETED WORK CERTIFICATION

Permit Number: CEMVR-OD-P-2019-0329

Name of Permittee: Mr. Craig Fink, Tazewell County Highway Department

County/State: Tazewell / Illinois

Date of Issuance: June 3, 2020

Upon completion of the activity authorized by this permit and any mitigation required by the permit, sign this certification and return it to the following address:

U.S. Army Engineer District, Rock Island
ATTN: Regulatory Branch
Clock Tower Building
Post Office Box 2004
Rock Island, Illinois 61204-2004

Please note that your permitted activity is subject to a compliance inspection by a U.S. Army Corps of Engineers representative. If you fail to comply with this permit, you are subject to permit suspension, modification, or revocation.

I hereby certify that the work authorized by the above reference permit has been completed in accordance with the terms and conditions of the said permit, and required mitigation was completed in accordance with the permit conditions.

_____ _____

Signature of Permittee Date

BV

FACT SHEET NO. 8(IL)

US Army Corps
of Engineers
Rock Island District

NATIONWIDE PERMITS IN ILLINOIS

EFFECTIVE DATE: MARCH 19, 2017

On January 6, 2017, the Corps of Engineers published in the Federal Register (82 FR 1860), the Final Rule for the Nationwide Permits Program under the Rivers and Harbors Act of 1899; the Clean Water Act; and the Marine Protection, Research and Sanctuaries Act. These Nationwide Permits became effective on March 19, 2017.

The Nationwide Permit Program is an integral part of the Corps' Regulatory Program. The Nationwide Permits are a form of general permits issued by the Chief of Engineers and are intended to apply throughout the entire United States and its territories. A listing of the nationwide permits and general conditions is included herein. We encourage prospective permit applicants to consider the advantages of nationwide permit authorization during the preliminary design of their projects. Assistance and further information regarding all aspects of the Corps of Engineers Regulatory Program may be obtained by contacting the appropriate Corps of Engineers District at the address and/or telephone number listed on the last page of this Fact Sheet.

To ensure projects authorized by a Nationwide Permit will result in minimal adverse effects to the aquatic environment, the following **Regional Conditions** were developed for projects proposed **within the state of Illinois (See NOTE regarding the Chicago District):**

1. Stormwater management facilities shall not be located within a stream, except for NWPs 21, 44, 49, or 50.

2. For newly constructed channels through areas that are unvegetated, native grass filter strips, or a riparian buffer with native trees or shrubs, a minimum of 25 feet wide from the top of bank must be planted along both sides of the new channel. A survival rate of 80 percent of desirable native species with aerial coverage of at least 50 percent shall be achieved within 3 years of establishment of the buffer strip.

3. Side slopes of a newly constructed channel will be no steeper than 2:1 and planted to permanent, perennial, native vegetation if not armored.

4. For a single family residence authorized under Nationwide Permit No. 29, the permanent loss of waters of the United States (including jurisdictional wetlands) must not exceed 1/4 acre.

5. For NWP 46, the discharge of dredged or fill material into ditches and canals that would sever the jurisdiction of an upstream water of the United States from a downstream water of the United States is not allowed.

6. For NWP 52, no project will be authorized within Lake Michigan. An individual permit will be required.

7. Any bank stabilization activity involving a method that protrudes from the bank contours, such as jetties, stream barbs, and/or weirs, will require a pre-construction notification in accordance with General Condition 32.

8. Mitigation shall be constructed prior to, or concurrent with, the discharge of dredged or fill material into waters of the United States unless an alternate timeline is specifically approved in the authorization.

9. Operation of heavy equipment within the stream channel should be avoided. If in-stream work is unavoidable, it shall be performed in such a manner as to minimize the duration of the disturbance, turbidity increases, substrate disturbance, bank disturbance, and disturbance to riparian vegetation. This condition does not further restrict otherwise authorized drainage ditch maintenance activities.

NOTE: The Chicago District has suspended many of the Nationwide Permits and established regional permits for work in McHenry, Kane, Lake, DuPage, Will and Cook Counties in Illinois. Information regarding Chicago District requirements can be accessed through their website at http://www.lrc.usace.army.mil/Missions/Regulatory.aspx. If you have any questions regarding the Chicago District program, please contact the Regulatory Office by telephone at 312/846-5530, or e-mail lrcregweb@usace.army.mil.

Permits, issued by the Corps of Engineers, under the authority of Section 404 of the Clean Water Act may not be issued until the state (where the discharge will occur) certifies, under Section 401 of the Act, that the discharge will comply with the water quality standards of the State. On February 27, 2017, the Illinois Environmental Protection Agency (IEPA) issued their final Section 401 Water Quality Certification decision.

DENIED NATIONWIDE PERMITS

The IEPA did not issue a generic water quality certification for the following nationwide permits which are listed by subject only:

21. Surface Coal Mining Activities
23. Approved Categorical Exclusions
31. Maintenance of Existing Flood Control Facilities
34. Cranberry Production Activities
37. Emergency Watershed Protection and Rehabilitation
48. Commercial Shellfish Aquaculture Activities
49. Coal Remining Activities
50. Underground Coal Mining Activities

Since Nationwide Permits 21, 23, 31, 37, 48, 49, and 50 are applicable under both Section 10 and 404, the State Section 401 certification is only required for discharges of pollutants under these nationwide permits. Section 10 work not involving discharges of dredged or fill material continues to be authorized under these nationwide permits.

Authorization for discharges covered by all the above nationwide permits is denied without prejudice. Applicants wishing to conduct such discharges must first obtain either an individual water quality certification or waiver from:

ILLINOIS ENVIRONMENTAL PROTECTION AGENCY
1021 NORTH GRAND AVENUE EAST
POST OFFICE BOX 19276
SPRINGFIELD, ILLINOIS 62794-9276

If the state certifying agency fails to act on an application for water quality certification within 60 days after receipt, the certification requirement is presumed to be waived. The applicant must furnish the District Engineer (at the appropriate address listed on the last page of the Fact Sheet) with a copy of the certification or proof of waiver. The discharge may proceed upon receipt of the District Engineer's determination that the discharge qualifies for authorization under this nationwide permit. Details of this procedure are contained in 33 CFR 330.4, a copy of which is available upon request.

Under certain circumstances, Nationwide Permits 3, 7, 8, 12, 13, 14, 17, 18, 21, 22, 23, 27, 29, 31, 33, 34, 36, 37, 38, 39, 40, 42, 43, 44, 45, 46, 48, 49, 50, 51, 52, 53 and 54 require that the permittee notify the District Engineer at least 45 days prior to performing the discharge under certain circumstances. Specific instructions for these notifications are contained in General condition 32, a copy of which is included.

For all other Nationwide Permits, the IEPA issued Section 401 Water Quality Certification with conditions. General Conditions 1, 2, and 3 apply to all nationwide permits for which certification was not denied and activities require authorization under Section 404 of the Clean Water Act. Other conditions specific to a Nationwide Permit are listed at the end of the subject nationwide permit.

General Condition 1: An individual 401 water quality certification will be required for any activities permitted under these Nationwide Permits for discharges to waters designated by the State of Illinois as Outstanding Resource Waters under 35 Ill. Adm. Code 302.105(b).

General Condition 2: Projects requiring authorization under Section 404 of the Clean Water Act must implement Best Management Practices (BMPs) to protect water quality, preserve natural hydrology and minimize the overall impacts to aquatic resources during and after construction. Projects that include a discharge of pollutants to waters that have impaired water quality according to the Illinois Environmental Protection Agency's Section 303(d) list or for which there is an approved Total Maximum Daily Load (TMDL) allocation for any parameter, additional planning will be necessary to ensure that no further degradation of water quality will occur. The TMDL program information and the Agency's 303(d) list of impaired waters are available at http://www.epa.illinois.gov/topics/water-quality/watershed-management/tmdls/index. For waters that include an approved TMDL the applicant shall incorporate into their plans and BMPs any measures that ensure consistency with the assumptions and requirements of the TMDL within any timeframes established in the TMDL. The applicant must carefully document the justifications for all plans and BMPs, and install, implement and maintain BMPs that are consistent with all relevant pollutant load allocations and conditions in the TMDL implementation plan. If a TMDL has not yet been approved to address water quality impairments that are documented in the Agency's 303(d)

General Condition 3: Prior to proceeding with any work in accordance with any Nationwide Permit, potential impacts to threatened or endangered species shall be identified through use of the State's Ecological Compliance Assessment Tool (EcoCAT) at http://dnrecocat.state.il.us/ecopublic/. If potential impacts to State threatened or endangered species are identified, the Illinois Department of Natural Resources shall be consulted with.

Nationwide Permits and Conditions

The following is a list of the nationwide permits, authorized by the Chief of Engineers, and published in the Federal Register (82 FR 1860). Permittees wishing to conduct activities under the nationwide permits must comply with the conditions published in Section C. The Nationwide

Permit General Conditions found in Section C have been reprinted at the end of this Fact Sheet. The parenthetical references (Section 10, Section 404) following each nationwide permit indicate the specific authorities under which that permit is issued.

B. Nationwide Permits

1. Aids to Navigation. The placement of aids to navigation and regulatory markers that are approved by and installed in accordance with the requirements of the U.S. Coast Guard (see 33 CFR, chapter I, subchapter C, part 66).(Authority: Section 10 of the Rivers and Harbors Act of 1899 (Section 10))

2. Structures in Artificial Canals. Structures constructed in artificial canals within principally residential developments where the connection of the canal to a navigable water of the United States has been previously authorized (see 33 CFR 322.5(g)). (Authority: Section 10)

3. Maintenance. (a) The repair, rehabilitation, or replacement of any previously authorized, currently serviceable structure or fill, or of any currently serviceable structure or fill authorized by 33 CFR 330.3, provided that the structure or fill is not to be put to uses differing from those uses specified or contemplated for it in the original permit or the most recently authorized modification. Minor deviations in the structure's configuration or filled area, including those due to changes in materials, construction techniques, requirements of other regulatory agencies, or current construction codes or safety standards that are necessary to make the repair, rehabilitation, or replacement are authorized. This NWP also authorizes the removal of previously authorized structures or fills. Any stream channel modification is limited to the minimum necessary for the repair, rehabilitation, or replacement of the structure or fill; such modifications, including the removal of material from the stream channel, must be immediately adjacent to the project. This NWP also authorizes the removal of accumulated sediment and debris within, and in the immediate vicinity of, the structure or fill. This NWP also authorizes the repair, rehabilitation, or replacement of those structures or fills destroyed or damaged by storms, floods, fire or other discrete events, provided the repair, rehabilitation, or replacement is commenced, or is under contract to commence, within two years of the date of their destruction or damage. In cases of catastrophic events, such as hurricanes or tornadoes, this two-year limit may be waived by the district engineer, provided the permittee can demonstrate funding, contract, or other similar delays.

(b) This NWP also authorizes the removal of accumulated sediments and debris outside the immediate vicinity of existing structures (e.g., bridges, culverted road crossings, water intake structures, etc.). The removal of sediment is limited to the minimum necessary to restore the waterway in the vicinity of the structure to the approximate dimensions that existed when the structure was built, but cannot extend farther than 200 feet in any direction from the structure. This 200 foot limit does not apply to maintenance dredging to remove accumulated sediments blocking or restricting outfall and intake structures or to maintenance dredging to remove accumulated sediments from canals associated with outfall and intake structures. All dredged or excavated materials must be deposited and retained in an area that has no waters of the United States unless otherwise specifically approved by the district engineer under separate authorization.

(c) This NWP also authorizes temporary structures, fills, and work, including the use of temporary mats, necessary to conduct the maintenance activity. Appropriate measures must be taken to maintain normal downstream flows and minimize flooding to the maximum extent practicable, when temporary structures, work, and discharges, including cofferdams, are necessary for construction activities, access fills, or dewatering of construction sites. Temporary fills must consist of materials, and be placed in a manner, that will not be eroded by expected high flows. After conducting the maintenance activity, temporary fills must be removed in their entirety and the affected areas returned to Pre-construction elevations. The areas affected by temporary fills must be revegetated, as appropriate.

(d) This NWP does not authorize maintenance dredging for the primary purpose of navigation. This NWP does not authorize beach restoration. This NWP does not authorize new stream channelization or stream relocation projects.

Notification: For activities authorized by paragraph (b) of this NWP, the permittee must submit a pre-construction notification to the district engineer prior to commencing the activity (see general condition 32). The pre-construction notification must include information regarding the original design capacities and configurations of the outfalls, intakes, small impoundments, and canals. (Authorities: Section 10 of the Rivers and Harbors Act of 1899 and Section 404 of the Clean Water Act (Sections 10 and 404))

Note: This NWP authorizes the repair, rehabilitation, or replacement of any previously authorized structure or fill that does not qualify for the Clean Water Act Section 404(f) exemption for maintenance

NOTE: THE IEPA HAS CONDITIONED SECTION 401 WATER QUALITY CERTIFICATION APPLICABLE TO NATIONWIDE PERMIT 3. DEPARTMENT OF THE ARMY AUTHORIZATION PURSUANT TO SECTION 404 OF THE CLEAN WATER ACT (33 U.S.C. 1344) UNDER NATIONWIDE PERMIT 3 WILL BE SUBJECT TO THE THREE GENERAL IEPA CONDITIONS, THESE NATIONWIDE SPECIFIC CONDITIONS, AND THE CONDITIONS PUBLISHED IN SECTION C.

1. The applicant shall not cause:
   A. violation of applicable provisions of the Illinois Environmental Protection Act;
   B. water pollution defined and prohibited by the Illinois Environmental Protection Act;
   C. violation of applicable water quality standards of the Illinois Pollution Control Board, Title 35, Subtitle C: Water Pollution Rules and Regulation; or
   D. interference with water use practices near public recreation areas or water supply intakes.
2. Any spoil material excavated, dredged or otherwise produced must not be returned to the waterway but must be deposited in a self-contained area in compliance with all state statutes, as determined by the Illinois EPA.

3. Any backfilling must be done with clean material and placed in a manner to prevent violation of applicable water quality standards.
4. The applicant for Nationwide Permit 3 shall provide adequate planning and supervision during the project construction period for implementing construction methods, processes and cleanup procedures necessary to prevent water pollution and control erosion.
5. All areas affected by construction shall be mulched and seeded as soon after construction as possible. The applicant for Nationwide Permit 3 shall undertake necessary measures and procedures to reduce erosion during construction. Interim measures to prevent erosion during construction shall be taken and may include the installation of sedimentation basins and temporary mulching. All construction within the waterway shall be conducted during zero or low flow conditions. The applicant for Nationwide Permit 3 shall be responsible for obtaining an NPDES Storm Water Permit prior to initiating construction if the construction activity associated with the project will result in the disturbance of 1 (one) or more acres, total land area. An NPDES Storm Water Permit may be obtained by submitting a properly completed Notice of Intent (NOI) form by certified mail to the Agency's Division of Water Pollution Control, Permit Section.
6. The applicant for Nationwide 3 shall implement erosion control measures consistent with the "Illinois Urban Manual" (IEPA/USDA, NRCS; 2016).
7. Temporary work pads, cofferdams, access roads and other temporary fills shall be constructed of clean coarse aggregate or non-erodible non-earthen fill material that will not cause siltation. Sandbags, pre-fabricated rigid materials, sheet piling, inflatable bladders and fabric lined basins may be used for temporary facilities.
8. The applicant for Nationwide 3 that uses temporary work pads, cofferdams, access roads and other temporary fills in order to perform work in creeks, streams, or rivers shall maintain flow in these waters by utilizing dam and pumping, fluming, culverts or other such techniques.

4. Fish and Wildlife Harvesting, Enhancement, and Attraction Devices and Activities. Fish and wildlife harvesting devices and activities such as pound nets, crab traps, crab dredging, eel pots, lobster traps, duck blinds, and clam and oyster digging, fish aggregating devices, and small fish attraction devices such as open water fish concentrators (sea kites, etc.). This NWP does not authorize artificial reefs or impoundments and semi-impoundments of waters of the United States for the culture or holding of motile species such as lobster, or the use of covered oyster trays or clam racks. (Authorities: Sections 10 and 404)

5. Scientific Measurement Devices. Devices, whose purpose is to measure and record scientific data, such as staff gages, tide and current gages, meteorological stations, water recording and biological observation devices, water quality testing and improvement devices, and similar structures. Small weirs and flumes constructed primarily to record water quantity and velocity are also authorized provided the discharge is limited to 25 cubic yards. Upon completion of the use of the device to measure and record scientific data, the measuring device and any other structures or fills associated with that device (e.g., foundations, anchors, buoys, lines, etc.) must be removed to the maximum extent practicable and the site restored to pre-construction elevations. (Authorities: Sections 10 and 404)

6. Survey Activities. Survey activities, such as core sampling, seismic exploratory operations, plugging of seismic shot holes and other exploratory-type bore holes, exploratory trenching, soil surveys, sampling, sample plots or transects for wetland delineations, and historic resources surveys. For the purposes of this NWP, the term ''exploratory trenching'' means mechanical land clearing of the upper soil profile to expose bedrock or substrate, for the purpose of mapping or sampling the exposed material. The area in which the exploratory trench is dug must be restored to its pre-construction elevation upon completion of the work and must not drain a water of the United States. In wetlands, the top 6 to 12 inches of the trench should normally be backfilled with topsoil from the trench. This NWP authorizes the construction of temporary pads, provided the discharge does not exceed 1/10-acre in waters of the U.S. Discharges and structures associated with the recovery of historic resources are not authorized by this NWP. Drilling and the discharge of excavated material from test wells for oil and gas exploration are not authorized by this NWP; the plugging of such wells is authorized. Fill placed for roads and other similar activities is not authorized by this NWP. The NWP does not authorize any permanent structures. The discharge of drilling mud and cuttings may require a permit under section 402 of the Clean Water Act. (Authorities: Sections 10 and 404)

NOTE: THE IEPA HAS CONDITIONED SECTION 401 WATER QUALITY CERTIFICATION APPLICABLE TO NATIONWIDE PERMIT 6. DEPARTMENT OF THE ARMY AUTHORIZATION PURSUANT TO SECTION 404 OF THE CLEAN WATER ACT (33 U.S.C. 1344) UNDER NATIONWIDE PERMIT 6 WILL BE SUBJECT TO THE THREE GENERAL IEPA CONDITIONS, THESE NATIONWIDE SPECIFIC CONDITIONS, AND THE CONDITIONS PUBLISHED IN SECTION C.

1. The applicant shall not cause:
   A. violation of applicable provisions of the Illinois Environmental Protection Act;
   B. water pollution defined and prohibited by the Illinois Environmental Protection Act;
   C. violation of applicable water quality standards of the Illinois Pollution Control Board, Title 35, Subtitle C: Water Pollution Rules and Regulation; or
   D. interference with water use practices near public recreation areas or water supply intakes.
2. The applicant for Nationwide Permit 6 shall provide adequate planning and supervision during the project construction period for implementing construction methods, processes and cleanup procedures necessary to prevent water pollution and control erosion.
3. Material resulting from trench excavation within surface waters of the State may betemporarily sidecast adjacent to the trench excavation provided that:
   A. Sidecast material is not placed within a creek, stream, river or other flowing water body such that material dispersion could occur;

B. Sidecast material is not placed within ponds or other water bodies other than wetlands; and

C. Sidecast material is not placed within a wetland for a period longer than twenty (20) calendar days. Such sidecast material shall either be removed from the site, or used as backfill (refer to Condition 4 and 5).

4. Backfill used within trenches passing through surface water of the State, except wetland areas, shall be clean course aggregate, gravel or other material which will not cause siltation. Excavated material may be used only if:
   A. Particle size analysis is conducted and demonstrates the material to be at least 80% sand or larger size material, using a #230 U.S. sieve; or
   B. Excavation and backfilling are done under dry conditions.
5. Backfill used within trenches passing through wetland areas shall consist of clean material which will not cause siltation. Excavated material shall be used to the extent practicable, with the upper six (6) to twelve (12) inches backfilled with the topsoil obtained during trench excavation.
6. Temporary work pads shall be constructed of clean coarse aggregate or non-erodible non-earthen fill material that will not cause siltation. Sandbags, pre-fabricated rigid materials, sheet piling, inflatable bladders and fabric lined basins may be used for temporary facilities.
7. The applicant for Nationwide Permit 6 that uses temporary work pads in order to perform work in creeks, streams, or rivers shall maintain flow in the these waters by utilizing dam and pumping, fluming, culverts or other such techniques.

7. Outfall Structures and Associated Intake Structures. Activities related to the construction or modification of outfall structures and associated intake structures, where the effluent from the outfall is authorized, conditionally authorized, or specifically exempted by, or otherwise in compliance with regulations issued under the National Pollutant Discharge Elimination System Program (section 402 of the Clean Water Act). The construction of intake structures is not authorized by this NWP, unless they are directly associated with an authorized outfall structure

Notification: The permittee must submit a pre-construction notification to the district engineer prior to commencing the activity. (See general condition 32.)
(Authorities: Sections 10 and 404)

8. Oil and Gas Structures on the Outer Continental Shelf. Structures for the exploration, production, and transportation of oil, gas, and minerals on the outer continental shelf within areas leased for such purposes by the Department of the Interior, Bureau of Ocean Energy Management. Such structures shall not be placed within the limits of any designated shipping safety fairway or traffic separation scheme, except temporary anchors that comply with the fairway regulations in 33 CFR 322.5(l). The district engineer will review such proposals to ensure compliance with the provisions of the fairway regulations in 33 CFR 322.5(l). Any Corps review under this NWP will be limited to the effects on navigation and national security in accordance with 33 CFR 322.5(f), as well as 33 CFR 322.5(l) and 33 CFR part 334. Such structures will not be placed in established danger zones or restricted areas as designated in 33 CFR part 334, nor will such structures be permitted in EPA or Corps-designated dredged material disposal areas.

Notification: The permittee must submit a pre-construction notification to the district engineer prior to commencing the activity. (See general condition 32.)(Authority: Section 10)

9. Structures in Fleeting and Anchorage Areas. Structures, buoys, floats, and other devices placed within anchorage or fleeting areas to facilitate moorage of vessels where such areas have been established for that purpose. (Authority: Section 10)

10. Mooring Buoys. Non-commercial, single-boat, mooring buoys. (Authority: Section 10)

11. Temporary Recreational Structures. Temporary buoys, markers, small floating docks, and similar structures placed for recreational use during specific events such as water skiing competitions and boat races or seasonal use, provided that such structures are removed within 30 days after use has been discontinued. At Corps of Engineers reservoirs, the reservoir managers must approve each buoy or marker individually. (Authority: Section 10)

12. Utility Line Activities. Activities required for the construction, maintenance, repair, and removal of utility lines and associated facilities in waters of the United States, provided the activity does not result in the loss of greater than 1/2-acre of waters of the United States for each single and complete project. Utility lines: This NWP authorizes discharges of dredged or fill material into waters of the United States and structures or work in navigable waters for crossings of those waters associated with the construction, maintenance, or repair of utility lines, including outfall and intake structures. There must be no change in pre-construction contours of waters of the United States. A ''utility line'' is defined as any pipe or pipeline for the transportation of any gaseous, liquid, liquescent, or slurry substance, for any purpose, and any cable, line, or wire for the transmission for any purpose of electrical energy, telephone, and telegraph messages, and internet, radio, and television communication. The term ''utility line'' does not include activities that drain a water of the United States, such as drainage tile or french drains, but it does apply to pipes conveying drainage from another area. Material resulting from trench excavation may be temporarily sidecast into waters of the United States for no more than three months, provided the material is not placed in such a manner that it is dispersed by currents or other forces. The district engineer may extend the period of temporary side casting for no more than a total of 180 days, where appropriate. In wetlands, the top 6 to 12 inches of the trench should normally be backfilled with topsoil from the trench. The trench cannot be constructed or backfilled in such a manner as to drain waters of the United States (e.g., backfilling with extensive gravel layers, creating a french drain effect). Any

exposed slopes and stream banks must be stabilized immediately upon completion of the utility line crossing of each waterbody.

Utility line substations: This NWP authorizes the construction, maintenance, or expansion of substation facilities associated with a power line or utility line in non-tidal waters of the United States, provided the activity, in combination with all other activities included in one single and complete project, does not result in the loss of greater than 1/2-acre of waters of the United States. This NWP does not authorize discharges into non-tidal wetlands adjacent to tidal waters of the United States to construct, maintain, or expand substation facilities. Foundations for overhead utility line towers, poles, and anchors: This NWP authorizes the construction or maintenance of foundations for overhead utility line towers, poles, and anchors in all waters of the United States, provided the foundations are the minimum size necessary and separate footings for each tower leg (rather than a larger single pad) are used where feasible.

Access roads: This NWP authorizes the construction of access roads for the construction and maintenance of utility lines, including overhead power lines and utility line substations, in non-tidal waters of the United States, provided the activity, in combination with all other activities included in one single and complete project, does not cause the loss of greater than 1/2-acre of non-tidal waters of the United States. This NWP does not authorize discharges into non-tidal wetlands adjacent to tidal waters for access roads. Access roads must be the minimum width necessary (see Note 2, below). Access roads must be constructed so that the length of the road minimizes any adverse effects on waters of the United States and must be as near as possible to pre-construction contours and elevations (e.g., at grade corduroy roads or geotextile/gravel roads). Access roads constructed above pre-construction contours and elevations in waters of the United States must be properly bridged or culverted to maintain surface flows.

This NWP may authorize utility lines in or affecting navigable waters of the United States even if there is no associated discharge of dredged or fill material (See 33 CFR part 322). Overhead utility lines constructed over Section 10 waters and utility lines that are routed in or under Section 10 waters without a discharge of dredged or fill material require a Section 10 permit.

This NWP authorizes, to the extent that Department of the Army authorization is required, temporary structures, fills, and work necessary for the remediation of inadvertent returns of drilling fluids to waters of the United States through sub-soil fissures or fractures that might occur during horizontal directional drilling activities conducted for the purpose of installing or replacing utility lines. These remediation activities must be done as soon as practicable, to restore the affected waterbody. District engineers may add special conditions to this NWP to require a remediation plan for addressing inadvertent returns of drilling fluids to waters of the United States during horizontal directional drilling activities conducted for the purpose of installing or replacing utility lines.

This NWP also authorizes temporary structures, fills, and work, including the use of temporary mats, necessary to conduct the utility line activity. Appropriate measures must be taken to maintain normal downstream flows and minimize flooding to the maximum extent practicable, when temporary structures, work, and discharges, including cofferdams, are necessary for construction activities, access fills, or dewatering of construction sites. Temporary fills must consist of materials, and be placed in a manner, that will not be eroded by expected high flows. After construction, temporary fills must be removed in their entirety and the affected areas returned to pre-construction elevations. The areas affected by temporary fills must be revegetated, as appropriate.

Notification: The permittee must submit a pre-construction notification to the district engineer prior to commencing the activity if any of the following criteria are met: (1) The activity involves mechanized land clearing in a forested wetland for the utility line right-of-way; (2) a Section 10 permit is required; (3) the utility line in waters of the United States, excluding overhead lines, exceeds 500 feet; (4) the utility line is placed within a jurisdictional area (i.e., water of the United States), and it runs parallel to or along a stream bed that is within that jurisdictional area; (5) discharges that result in the loss of greater than 1/10-acre of waters of the United States; (6) permanent access roads are constructed above grade in waters of the United States for a distance of more than 500 feet; or (7) permanent access roads are constructed in waters of the United States with impervious materials. (See general condition 32.) (Authorities: Sections 10 and 404)

Note 1: Where the utility line is constructed or installed in navigable waters of the United States (i.e., Section 10 waters) within the coastal United States, the Great Lakes, and United States territories, a copy of the NWP verification will be sent by the Corps to the National Oceanic and Atmospheric Administration (NOAA), National Ocean Service (NOS), for charting the utility line to protect navigation.

Note 2: For utility line activities crossing a single waterbody more than one time at separate and distant locations, or multiple waterbodies at separate and distant locations, each crossing is considered a single and complete project for purposes of NWP authorization. Utility line activities must comply with 33 CFR 330.6(d).

Note 3: Utility lines consisting of aerial electric power transmission lines crossing navigable waters of the United States (which are defined at 33 CFR part 329) must comply with the applicable minimum clearances specified in 33 CFR 322.5(i).

Note 4: Access roads used for both construction and maintenance may be authorized, provided they meet the terms and conditions of this NWP. Access roads used solely for construction of the utility line must be removed upon completion of the work, in accordance with the requirements for temporary fills.

Note 5: Pipes or pipelines used to transport gaseous, liquid, liquescent, or slurry substances over navigable waters of the United States are considered to be bridges, not utility lines, and may require a permit from the U.S. Coast Guard pursuant to section 9 of the Rivers and Harbors Act of 1899. However, any discharges of dredged or fill material into waters of the United States associated with such pipelines will require a Section 404 permit (see NWP 15).

Note 6: This NWP authorizes utility line maintenance and repair activities that do not qualify for the Clean Water Act Section 404(f) exemption for maintenance of currently serviceable fills or fill structures.

Note 7: For overhead utility lines authorized by this NWP, a copy of the PCN and NWP verification will be provided to the Department of Defense Siting Clearinghouse, which will evaluate potential effects on military activities.

Note 8: For NWP 12 activities that require pre-construction notification, the PCN must include any other NWP(s), regional general permit(s), or individual permit(s) used or intended to be used to authorize any part of the proposed project or any related activity, including other separate and distant crossings that require Department of the Army authorization but do not require pre-construction notification (see paragraph (b) of general condition 32). The district engineer will evaluate the PCN in accordance with Section D, ''District Engineer's Decision.'' The district engineer may require mitigation to ensure that the authorized activity results in no more than minimal individual and cumulative adverse environmental effects (see general condition 23).

NOTE: THE IEPA HAS CONDITIONED SECTION 401 WATER QUALITY CERTIFICATION APPLICABLE TO NATIONWIDE PERMIT 12. DEPARTMENT OF THE ARMY AUTHORIZATION PURSUANT TO SECTION 404 OF THE CLEAN WATER ACT (33 U.S.C. 1344) UNDER NATIONWIDE PERMIT 12 WILL BE SUBJECT TO THE THREE GENERAL IEPA CONDITIONS, THESE NATIONWIDE SPECIFIC CONDITIONS, AND THE CONDITIONS PUBLISHED IN SECTION C.

1. Case-specific water quality certification from the Illinois EPA will be required for:
   A. activities in the following waters:
      i. Lake Calumet
      ii. Fox River (including the Fox Chain of Lakes)
      iii. Lake Michigan
      iv. Chicago Sanitary and Ship Canal
      v. Calumet-Sag Channel
      vi. Little Calumet River
      vii. Grand Calumet River
      viii. Calumet River
      ix. Pettibone Creek (in Lake County)
      x. South Branch of the Chicago River (including the South Fork)
      xi. North Branch of the Chicago River (including the East and West Forks and the Skokie Lagoons)
      xii. Chicago River (Main Stem)
      xiii. Des Plaines River
      xiv. Kankakee
      xv. All Public and Food Processing Water Supplies with surface intake facilities. The Illinois EPA's Division of Public Water Supply at 217/782-1020 may be contacted for information on these water supplies.
   B. activities in the following waters if material is sidecast into waters of the State or wetlands:
      i. Saline River (in Hardin County)
      ii. Richland Creek (in St. Clair and Monroe Counties)
      iii. Rock River (in Winnebago County)
      iv. Illinois River upstream of mile 229.6 (Illinois Route 178 bridge)
      v. Illinois River between mile 140.0 and 182.0
      vi. DuPage River (including the East and West Branches)
      vii. Salt Creek (Des Plaines River Watershed)
      viii. Waukegan River (including the South Branch)
2. Section 401 water quality certification is hereby issued for all other waters, with the following conditions:
   A. The applicant for Nationwide Permit 12 shall not cause:
      i. violation of applicable provisions of the Illinois Environmental Protection Act;
      ii. water pollution defined and prohibited by the Illinois Environmental Protection Act;
      iii. violation of applicable water quality standards of the Illinois Pollution Control Board,Title 35, Subtitle C: Water Pollution Rules and Regulation; or
      iv. interference with water use practices near public recreation areas or water supply intakes.
   B. The applicant for Nationwide Permit 12 shall provide adequate planning and supervision during the project construction period for implementing construction methods, processes and cleanup procedures necessary to prevent water pollution and control erosion.
   C. Material resulting from trench excavation within surface waters of the State may be temporarily sidecast adjacent to the trench excavation provided that:
      i. Sidecast material is not placed within a creek, stream, river or other flowing water body such that material dispersion could occur;
      ii. Side cast material is not placed within ponds or other water bodies other than wetlands; and
      iii. Sidecast material is not placed within a wetland for a period longer than twenty (20) calendar days. Such sidecast material shall either be removed from the site (refer to Condition 2.F), or used as backfill (refer to Condition 2.D and 2.E).
   D. Backfill used within trenches passing through surface water of the State, except wetland areas, shall be clean course aggregate, gravel or other material which will not cause siltation, pipe damage during placement, or chemical corrosion in place. Excavated material may be used only if:
      i. Particle size analysis is conducted and demonstrates the material to be at least 80% sand or larger size material, using a #230 U.S. sieve; or
      ii. Excavation and backfilling are done under dry conditions.
   E. Backfill used within trenches passing through wetland areas shall consist of clean material which will not cause siltation, pipe damage during placement, or chemical corrosion in place. Excavated material shall be used to the extent practicable, with the upper six (6) to twelve (12) inches backfilled with the topsoil obtained during trench excavation.

F. All material excavated which is not being used as backfill as stipulated in Condition 2.D and 2.E shall be stored or disposed in self-contained areas with no discharge to waters of the State. Material shall be disposed of appropriately under the regulations at 35 Il. Adm. Code Subtitle G.

G. All areas affected by construction shall be mulched and seeded as soon after construction as possible. The applicant for Nationwide Permit 12 shall undertake necessary measures and procedures to reduce erosion during construction. Interim measures to prevent erosion during construction shall be taken and may include the installation of sedimentation basins and temporary mulching. All construction within the waterway shall be conducted during zero or low flow conditions. The applicant for Nationwide Permit 12 shall be responsible for obtaining an NPDES Storm Water Permit required by the federal Clean Water Act prior to initiating construction if the construction activity associated with the project will result in the disturbance of 1 (one) or more acres, total land area. An NPDES Storm Water Permit may be obtained by submitting a properly completed Notice of Intent (NOI) form by certified mail to the Agency's Division of Water Pollution Control, Permit Section.

H. The applicant for Nationwide Permit 12 shall implement erosion control measures consistent with the "Illinois Urban Manual" (IEPA/USDA, NRCS; 2016).

I. The use of directional drilling to install utility pipelines below surface waters of the State is hereby certified provided that:
   i. All pits and other construction necessary for the directional drilling process are located outside of surface waters of the State;
   ii. All drilling fluids shall be adequately contained such that they cannot cause a discharge to surface waters of the State. Such fluids shall be treated as stipulated in Condition 2.F; and
   iii. Erosion and sediment control is provided in accordance with Conditions 2.B, 2.G, and 2.H.

J. Temporary work pads, cofferdams, access roads and other temporary fills shall be constructed of clean coarse aggregate or non-erodible non-earthen fill material that will not cause siltation. Material excavated or dredged from the surface water or wetland shall not be used to construct the temporary facility. Sandbags, pre-fabricated rigid materials, sheet piling, inflatable bladders and fabric lined basins may be used for temporary facilities.

K. The applicant for Nationwide Permit 12 that uses temporary work pads, cofferdams, access roads or other temporary fills in order to perform work in creeks, streams, or rivers for construction activities shall maintain flow in the these waters during such construction activity by utilizing dam and pumping, fluming, culverts or other such techniques.

L. Permanent access roads shall be constructed of clean coarse aggregate or non-erodible nonearthen fill material that will not cause siltation. Material excavated or dredged from the surface water or wetland shall not be used to construct the access road in waters of the state. The applicant for Nationwide Permit 12 that constructs access roads shall maintain flow in creeks, streams and rivers by installing culverts, bridges or other such techniques.

13. Bank Stabilization. Bank stabilization activities necessary for erosion control or prevention, such as vegetative stabilization, bioengineering, sills, rip rap, revetment, gabion baskets, stream barbs, and bulkheads, or combinations of bank stabilization techniques, provided the activity meets all of the following criteria:

(a) No material is placed in excess of the minimum needed for erosion protection;

(b) The activity is no more than 500 feet in length along the bank, unless the district engineer waives this criterion by making a written determination concluding that the discharge will result in no more than minimal adverse environmental effects (an exception is for bulkheads—the district engineer cannot issue a waiver for a bulkhead that is greater than 1,000 feet in length along the bank);

(c) The activity will not exceed an average of one cubic yard per running foot, as measured along the length of the treated bank, below the plane of the ordinary high water mark or the high tide line, unless the district engineer waives this criterion by making a written determination concluding that the discharge will result in no more than minimal adverse environmental effects;

(d) The activity does not involve discharges of dredged or fill material into special aquatic sites, unless the district engineer waives this criterion by making a written determination concluding that the discharge will result in no more than minimal adverse environmental effects;

(e) No material is of a type, or is placed in any location, or in any manner, that will impair surface water flow into or out of any waters of the United States;

(f) No material is placed in a manner that will be eroded by normal or expected high flows (properly anchored native trees and treetops may be used in low energy areas);

(g) Native plants appropriate for current site conditions, including salinity, must be used for bioengineering or vegetative bank stabilization;

(h) The activity is not a stream channelization activity; and

(i) The activity must be properly maintained, which may require repairing it after severe storms or erosion events. This NWP authorizes those maintenance and repair activities if they require authorization. This NWP also authorizes temporary structures, fills, and work, including the use of temporary mats, necessary to construct the bank stabilization activity. Appropriate measures must be taken to maintain normal downstream flows and minimize flooding to the maximum extent practicable, when temporary structures, work, and discharges, including cofferdams, are necessary for construction activities, access fills, or dewatering of construction sites. Temporary fills must consist of materials, and be placed in a manner, that will not be eroded by expected high

flows. After construction, temporary fills must be removed in their entirety and the affected areas returned to Pre-construction elevations. The areas affected by temporary fills must be revegetated, as appropriate.

Invasive plant species shall not be used for bioengineering or vegetative bank stabilization.

Notification: The permittee must submit a pre-construction notification to the district engineer prior to commencing the activity if the bank stabilization activity: (1) Involves discharges into special aquatic sites; or (2) is in excess of 500 feet in length; or (3) will involve the discharge of greater than an average of one cubic yard per running foot as measured along the length of the treated bank, below the plane of the ordinary high water mark or the high tide line. (See general condition 32.) (Authorities: Sections 10 and 404)

NOTE: THE IEPA HAS CONDITIONED SECTION 401 WATER QUALITY CERTIFICATION APPLICABLE TO NATIONWIDE PERMIT 13. DEPARTMENT OF THE ARMY AUTHORIZATION PURSUANT TO SECTION 404 OF THE CLEAN WATER ACT (33 U.S.C. 1344) UNDER NATIONWIDE PERMIT 13 WILL BE SUBJECT TO THE THREE GENERAL IEPA CONDITIONS, THESE NATIONWIDE SPECIFIC CONDITIONS, AND THE CONDITIONS PUBLISHED IN SECTION C.

1. The bank stabilization activities shall not exceed 1000 linear feet.
2. Asphalt, bituminous material and concrete with protruding material such as reinforcing bars or mesh shall not be:
   A. used for backfill;
   B. placed on shorelines/streambanks; or
   C. placed in waters of the State.
3. Any spoil material excavated, dredged or otherwise produced must not be returned to the waterway but must be deposited in a self-contained area in compliance with all state statutes, as determined by the Illinois EPA.
4. Any backfilling must be done with clean material and placed in a manner to prevent violation of applicable water quality standards.
5. The applicant shall consider installing bioengineering practices in lieu of structural practices of bank stabilization to minimize impacts to the lake, pond, river or stream and enhance aquatic habitat. The applicant shall document the selection process for the bank stabilization technique(s) and the basis for the selection of the bank stabilization practices. Bioengineering techniques may include, but are not limited to:
   A. adequately sized riprap or A-Jack structures keyed into the toe of the slope with native plantings on the banks above;
   B. vegetated geogrids;
   C. coconut fiber (coir) logs;
   D. live, woody vegetative cuttings, fascines or stumps;
   E. brush layering; and
   F. soil lifts.

14. Linear Transportation Projects. Activities required for crossings of waters of the United States associated with the construction, expansion, modification, or improvement of linear transportation projects (e.g., roads, highways, railways, trails, airport runways, and taxiways) in waters of the United States. For linear transportation projects in non-tidal waters, the discharge cannot cause the loss of greater than 1/2-acre of waters of the United States. For linear transportation projects in tidal waters, the discharge cannot cause the loss of greater than 1/ 3-acre of waters of the United States. Any stream channel modification, including bank stabilization, is limited to the minimum necessary to construct or protect the linear transportation project; such modifications must be in the immediate vicinity of the project.

This NWP also authorizes temporary structures, fills, and work, including the use of temporary mats, necessary to construct the linear transportation project. Appropriate measures must be taken to maintain normal downstream flows and minimize flooding to the maximum extent practicable, when temporary structures, work, and discharges, including cofferdams, are necessary for construction activities, access fills, or dewatering of construction sites. Temporary fills must consist of materials, and be placed in a manner, that will not be eroded by expected high flows. Temporary fills must be removed in their entirety and the affected areas returned to Pre-construction elevations. The areas affected by temporary fills must be revegetated, as appropriate.

This NWP cannot be used to authorize non-linear features commonly associated with transportation projects, such as vehicle maintenance or storage buildings, parking lots, train stations, or aircraft hangars.

Notification: The permittee must submit a pre-construction notification to the district engineer prior to commencing the activity if: (1) The loss of waters of the United States exceeds 1/10-acre; or (2) there is a discharge in a special aquatic site, including wetlands. (See general condition 32.) (Authorities: Sections 10 and 404)

Note 1: For linear transportation projects crossing a single waterbody more than one time at separate and distant locations, or multiple waterbodies at separate and distant locations, each crossing is considered a single and complete project for purposes of NWP authorization. Linear transportation projects must comply with 33 CFR 330.6(d).

Note 2: Some discharges for the construction of farm roads or forest roads, or temporary roads for moving mining equipment, may qualify for an exemption under Section 404(f) of the Clean Water Act (see 33 CFR 323.4).

Note 3: For NWP 14 activities that require pre-construction notification, the PCN must include any other NWP(s), regional general permit(s), or individual permit(s) used or intended to be used to authorize any part of the proposed project or any related activity, including other separate and distant crossings that require Department of the Army authorization but do not require pre-construction notification (see paragraph (b) of general condition 32). The district engineer will evaluate the PCN in accordance with Section D, ''District Engineer's Decision.'' The district engineer may require mitigation to ensure that the authorized activity results in no more than minimal individual and cumulative adverse environmental effects (see general condition 23).

NOTE: THE IEPA HAS CONDITIONED SECTION 401 WATER QUALITY CERTIFICATION APPLICABLE TO NATIONWIDE PERMIT 14. DEPARTMENT OF THE ARMY AUTHORIZATION PURSUANT TO SECTION 404 OF THE CLEAN WATER ACT (33 U.S.C. 1344) UNDER NATIONWIDE PERMIT 14 WILL BE SUBJECT TO THE THREE GENERAL IEPA CONDITIONS, THESE NATIONWIDE SPECIFIC CONDITIONS, AND THE CONDITIONS PUBLISHED IN SECTION C.

1. The affected area of the stream channel shall not exceed 300 linear feet, as measured along the stream corridor.
2. Any spoil material excavated, dredged or otherwise produced must not be returned to the waterway but must be deposited in a self-contained area in compliance with all state statutes, as determined by the Illinois EPA.
3. Any backfilling must be done with clean material and placed in a manner to prevent violation of applicable water quality standards.
4. The applicant shall not cause:
   A. violation of applicable provisions of the Illinois Environmental Protection Act;
   B. water pollution defined and prohibited by the Illinois Environmental Protection Act;
   C. violation of applicable water quality standards of the Illinois Pollution Control Board, Title 35, Subtitle C: Water Pollution Rules and Regulation; or
   D. interference with water use practices near public recreation areas or water supply intakes.
5. All areas affected by construction shall be mulched and seeded as soon after construction as possible. The applicant shall undertake necessary measures and procedures to reduce erosion during construction. Interim measures to prevent erosion during construction shall be taken and may include the installation of sedimentation basins and temporary mulching. All construction within the waterway shall be conducted during zero or low flow conditions. The applicant shall be responsible for obtaining an NPDES Storm Water Permit prior to initiating construction if the construction activity associated with the project will result in the disturbance of 1 (one) or more acres, total land area. An NPDES Storm Water Permit may be obtained by submitting a properly completed Notice of Intent (NOI) form by certified mail to the Agency's Division of Water Pollution Control, Permit Section.
6. The applicant for Nationwide Permit 14 shall implement erosion control measures consistent with the "Illinois Urban Manual" (IEPA/USDA, NRCS; 2016).
7. Temporary work pads, cofferdams, access roads and other temporary fills shall be constructed of clean coarse aggregate or non-erodible non-earthen fill material that will not cause siltation. Sandbags, pre-fabricated rigid materials, sheet piling, inflatable bladders and fabric lined basins may be used for temporary facilities.
8. The applicant for Nationwide Permit 14 that uses temporary work pads, cofferdams, access roads and other temporary fills in order to perform work in creeks, streams, or rivers shall maintain flow in these waters by utilizing dam and pumping, fluming, culverts or other such techniques.

15. U.S. Coast Guard Approved Bridges. Discharges of dredged or fill material incidental to the construction of a bridge across navigable waters of the United States, including cofferdams, abutments, foundation seals, piers, and temporary construction and access fills, provided the construction of the bridge structure has been authorized by the U.S. Coast Guard under Section 9 of the Rivers and Harbors Act of 1899 or other applicable laws. Causeways and approach fills are not included in this NWP and will require a separate Section 404 permit. (Authority: Section 404 of the Clean Water Act (Section 404))

NOTE: THE IEPA HAS CONDITIONED SECTION 401 WATER QUALITY CERTIFICATION APPLICABLE TO NATIONWIDE PERMIT 15. DEPARTMENT OF THE ARMY AUTHORIZATION PURSUANT TO SECTION 404 OF THE CLEAN WATER ACT (33 U.S.C. 1344) UNDER NATIONWIDE PERMIT 15 WILL BE SUBJECT TO THE THREE GENERAL IEPA CONDITIONS, THESE NATIONWIDE SPECIFIC CONDITIONS, AND THE CONDITIONS PUBLISHED IN SECTION C.

1. The applicant shall not cause:
   A. violation of applicable provisions of the Illinois Environmental Protection Act;
   B. water pollution defined and prohibited by the Illinois Environmental Protection Act;
   C. violation of applicable water quality standards of the Illinois Pollution Control Board, Title 35, Subtitle C: Water Pollution Rules and Regulation; or
   D. interference with water use practices near public recreation areas or water supply intakes.
2. The applicant shall implement erosion control measures consistent with the “Illinois Urban Manual” (IEPA/USDA, NRCS; 2011).
3. Any spoil material excavated, dredged or otherwise produced must not be returned to the waterway but must be deposited in a self-contained area in compliance with all state statutes, regulations and permit requirements with no discharge to waters of the State unless a permit has been issued by this Agency. Any backfilling must be done with clean material and placed in a manner to prevent violation of applicable water quality standards.
4. All areas affected by construction shall be mulched and seeded as soon after construction as possible. The applicant shall undertake necessary measures and procedures to reduce erosion during construction. Interim measures to prevent erosion during construction shall be taken and may include the installation of sedimentation basins and temporary mulching. All construction within the waterway shall be conducted during zero or low flow conditions. The applicant shall be responsible for obtaining an NPDES Storm Water Permit prior to initiating construction if the construction activity associated with the project will result in the disturbance of 1 (one) or more acres, total land area. An NPDES Storm Water Permit may be obtained by submitting a properly completed Notice of Intent (NOI) form by certified mail to the Agency's Division of Water Pollution Control, Permit Section.

16. Return Water From Upland Contained Disposal Areas. Return water from an upland contained dredged material disposal area. The return water from a contained disposal area is administratively defined as a discharge of dredged material by 33 CFR 323.2(d), even though the disposal itself occurs in an area that has no waters of the United States and does not require a

section 404 permit. This NWP satisfies the technical requirement for a section 404 permit for the return water where the quality of the return water is controlled by the state through the section 401 certification procedures. The dredging activity may require a section 404 permit (33 CFR 323.2(d)), and will require a Section 10 permit if located in navigable waters of the United States. (Authority: Section 404)

NOTE: THE IEPA HAS CONDITIONED SECTION 401 WATER QUALITY CERTIFICATION APPLICABLE TO NATIONWIDE PERMIT 16. DEPARTMENT OF THE ARMY AUTHORIZATION PURSUANT TO SECTION 404 OF THE CLEAN WATER ACT (33 U.S.C. 1344) UNDER NATIONWIDE PERMIT 16 WILL BE SUBJECT TO THE THREE GENERAL IEPA CONDITIONS, THESE NATIONWIDE SPECIFIC CONDITIONS, AND THE CONDITIONS PUBLISHED IN SECTION C.

1. Applicants shall obtain a Subtitle C State Construction and Operating Permit for construction and operation of any dredge material disposal facility or upland contained disposal facility.
2. The applicant shall not cause:
   A. violation of applicable provisions of the Illinois Environmental Protection Act;
   B. water pollution defined and prohibited by the Illinois Environmental Protection Act;
   C. violation of applicable water quality standards of the Illinois Pollution Control Board, Title 35, Subtitle C: Water Pollution Rules and Regulation; or
   D. interference with water use practices near public recreation areas or water supply intakes.
3. The applicant for Nationwide Permit 16 shall implement erosion control measures consistent with the "Illinois Urban Manual" (IEPA/USDA, NRCS; 2016).
4. Any spoil material excavated, dredged or otherwise produced must not be returned to the waterway but must be deposited in a self-contained area in compliance with all state statutes, regulations and permit requirements with no discharge to waters of the State unless a permit has been issued by this Agency. Any backfilling must be done with clean material and placed in a manner to prevent violation of applicable water quality standards.

17. Hydropower Projects. Discharges of dredged or fill material associated with hydropower projects having: (a) Less than 5000 kW of total generating capacity at existing reservoirs, where the project, including the fill, is licensed by the Federal Energy Regulatory Commission (FERC) under the Federal Power Act of 1920, as amended; or (b) a licensing exemption granted by the FERC pursuant to section 408 of the Energy Security Act of 1980 (16 U.S.C. 2705 and 2708) and section 30 of the Federal Power Act, as amended.

Notification: The permittee must submit a pre-construction notification to the district engineer prior to commencing the activity. (See general condition 32.) (Authority: Section 404)

NOTE: THE IEPA HAS CONDITIONED SECTION 401 WATER QUALITY CERTIFICATION APPLICABLE TO NATIONWIDE PERMIT 17. DEPARTMENT OF THE ARMY AUTHORIZATION PURSUANT TO SECTION 404 OF THE CLEAN WATER ACT (33 U.S.C. 1344) UNDER NATIONWIDE PERMIT 17 WILL BE SUBJECT TO THE THREE GENERAL IEPA CONDITIONS, THESE NATIONWIDE SPECIFIC CONDITIONS, AND THE CONDITIONS PUBLISHED IN SECTION C.

1. The applicant shall not cause:
   A. violation of applicable provisions of the Illinois Environmental Protection Act;
   B. water pollution defined and prohibited by the Illinois Environmental Protection Act;
   C. violation of applicable water quality standards of the Illinois Pollution Control Board, Title 35, Subtitle C: Water Pollution Rules and Regulation; or
   D. interference with water use practices near public recreation areas or water supply intakes.
2. The applicant for Nationwide Permit 17 shall implement erosion control measures consistent with the "Illinois Urban Manual" (IEPA/USDA, NRCS; 2016).
3. Any spoil material excavated, dredged or otherwise produced must not be returned to the waterway but must be deposited in a self-contained area in compliance with all state statutes, regulations and permit requirements with no discharge to waters of the State unless a permit has been issued by this Agency. Any backfilling must be done with clean material and placed in a manner to prevent violation of applicable water quality standards.
4. An individual Section 401 water quality certification will be required for any project that is not previously approved by a Section 401 water quality certification issued by the Illinois EPA for a Federal Energy Regulatory Commission license or permit.

18. Minor Discharges. Minor discharges of dredged or fill material into all waters of the United States, provided the activity meets all of the following criteria:

(a) The quantity of discharged material and the volume of area excavated do not exceed 25 cubic yards below the plane of the ordinary high water mark or the high tide line;
(b) The discharge will not cause the loss of more than 1/10-acre of waters of the United States; and
(c) The discharge is not placed for the purpose of a stream diversion.

Notification: The permittee must submit a pre-construction notification to the district engineer prior to commencing the activity if: (1) The discharge or the volume of area excavated exceeds 10 cubic yards below the plane of the ordinary high water mark or the high tide line, or (2) the discharge is in a special aquatic site, including wetlands. (See general condition 32.) (Authorities: Sections 10 and 404)

NOTE: THE IEPA HAS CONDITIONED SECTION 401 WATER QUALITY CERTIFICATION APPLICABLE TO NATIONWIDE PERMIT 18. DEPARTMENT OF THE ARMY AUTHORIZATION PURSUANT TO SECTION 404 OF THE CLEAN WATER ACT (33 U.S.C. 1344) UNDER NATIONWIDE PERMIT 18 WILL BE SUBJECT TO THE THREE GENERAL IEPA CONDITIONS, THESE NATIONWIDE SPECIFIC CONDITIONS, AND THE CONDITIONS PUBLISHED IN SECTION C.

1. The applicant shall not cause:
   A. violation of applicable provisions of the Illinois Environmental Protection Act;

B. water pollution defined and prohibited by the Illinois Environmental Protection Act;
C. violation of applicable water quality standards of the Illinois Pollution Control Board, Title 35, Subtitle C: Water Pollution Rules and Regulation; or
D. interference with water use practices near public recreation areas or water supply intakes.

2. Any spoil material excavated, dredged or otherwise produced must not be returned to the waterway but must be deposited in a self-contained area in compliance with all state statutes, regulations and permit requirements with no discharge to waters of the State unless a permit has been issued by this Agency. Any backfilling must be done with clean material and placed in a manner to prevent violation of applicable water quality standards.
3. The applicant for Nationwide Permit 18 shall implement erosion control measures consistent with the "Illinois Urban Manual" (IEPA/USDA, NRCS; 2016).

19. Minor Dredging. Dredging of no more than 25 cubic yards below the plane of the ordinary high water mark or the mean high water mark from navigable waters of the United States (i.e., Section 10 waters). This NWP does not authorize the dredging or degradation through siltation of coral reefs, sites that support submerged aquatic vegetation (including sites where submerged aquatic vegetation is documented to exist but may not be present in a given year), anadromous fish spawning areas, or wetlands, or the connection of canals or other artificial waterways to navigable waters of the United States (see 33 CFR 322.5(g)). All dredged material must be deposited and retained in an area that has no waters of the United States unless otherwise specifically approved by the district engineer under separate authorization. (Authorities: Sections 10 and 404)

NOTE: THE IEPA HAS CONDITIONED SECTION 401 WATER QUALITY CERTIFICATION APPLICABLE TO NATIONWIDE PERMIT 19. DEPARTMENT OF THE ARMY AUTHORIZATION PURSUANT TO SECTION 404 OF THE CLEAN WATER ACT (33 U.S.C. 1344) UNDER NATIONWIDE PERMIT 19 WILL BE SUBJECT TO THE THREE GENERAL IEPA CONDITIONS, THESE NATIONWIDE SPECIFIC CONDITIONS, AND THE CONDITIONS PUBLISHED IN SECTION C.

1. The applicant shall not cause:
   A. violation of applicable provisions of the Illinois Environmental Protection Act;
   B. water pollution defined and prohibited by the Illinois Environmental Protection Act;
   C. violation of applicable water quality standards of the Illinois Pollution Control Board, Title 35, Subtitle C: Water Pollution Rules and Regulation; or
   D. interference with water use practices near public recreation areas or water supply intakes.
2. The applicant for Nationwide Permit 19 shall implement erosion control measures consistent with the "Illinois Urban Manual" (IEPA/USDA, NRCS; 2016).
3. Any spoil material excavated, dredged or otherwise produced must not be returned to the waterway but must be deposited in a self-contained area in compliance with all state statutes, regulations and permit requirements with no discharge to waters of the State unless a permit has been issued by this Agency. Any backfilling must be done with clean material and placed in a manner to prevent violation of applicable water quality standards.
4. Dredging shall be done by mechanical means and material shall not be discharged to Waters of the State.

20. Response Operations for Oil and Hazardous Substances. Activities conducted in response to a discharge or release of oil or hazardous substances that are subject to the National Oil and Hazardous Substances Pollution Contingency Plan (40 CFR part 300) including containment, cleanup, and mitigation efforts, provided that the activities are done under either: (1) The Spill Control and Countermeasure Plan required by 40 CFR 112.3; (2) the direction or oversight of the federal on- scene coordinator designated by 40 CFR part 300; or (3) any approved existing state, regional or local contingency plan provided that the Regional Response Team (if one exists in the area) concurs with the proposed response efforts. This NWP also authorizes activities required for the cleanup of oil releases in waters of the United States from electrical equipment that are governed by EPA's polychlorinated biphenyl spill response regulations at 40 CFR part 761. This NWP also authorizes the use of temporary structures and fills in waters of the U.S. for spill response training exercises. (Authorities: Sections 10 and 404)

***** 21. Surface Coal Mining Activities.** Discharges of dredged or fill material into waters of the United States associated with surface coal mining and reclamation operations, provided the following criteria are met:

(a) The activities are already authorized, or are currently being processed by states with approved programs under Title V of the Surface Mining Control and Reclamation Act of 1977 or as part of an integrated permit processing procedure by the Department of the Interior, Office of Surface Mining Reclamation and Enforcement;

(b) The discharge must not cause the loss of greater than 1/2-acre of non-tidal waters of the United States. The discharge must not cause the loss of more than 300 linear feet of stream bed, unless for intermittent and ephemeral stream beds the district engineer waives the 300 linear foot limit by making a written determination concluding that the discharge will result in no more than minimal individual and cumulative adverse environmental effects. The loss of stream bed plus any other losses of jurisdictional wetlands and waters caused by the NWP activity cannot exceed 1/2-acre. This NWP does not authorize discharges into tidal waters or non-tidal wetlands adjacent to tidal waters; and

(c) The discharge is not associated with the construction of valley fills. A ''valley fill'' is a fill structure that is typically constructed within valleys associated with steep, mountainous terrain, associated with surface coal mining activities.

Notification: The permittee must submit a pre-construction notification to the district engineer and receive written authorization prior to commencing the activity. (See general condition 32.)(Authorities: Sections 10 and 404)

22. Removal of Vessels. Temporary structures or minor discharges of dredged or fill material required for the removal of wrecked, abandoned, or disabled vessels, or the removal of man-made obstructions to navigation. This NWP does not authorize maintenance dredging, shoal removal, or riverbank snagging.

Notification: The permittee must submit a pre-construction notification to the district engineer prior to commencing the activity if: (1) The vessel is listed or eligible for listing in the National Register of Historic Places; or (2) the activity is conducted in a special aquatic site, including coral reefs and wetlands. (See General Condition 32.) If condition 1 above is triggered, the permittee cannot commence the activity until informed by the district engineer that compliance with the ''Historic Properties'' general condition is completed. (Authorities: Sections 10 and 404)

Note 1: If a removed vessel is disposed of in waters of the United States, a permit from the U.S. EPA may be required (see 40 CFR 229.3). If a Department of the Army permit is required for vessel disposal in waters of the United States, separate authorization will be required.

Note 2: Compliance with general condition 18, Endangered Species, and general condition 20, Historic Properties, is required for all NWPs. The concern with historic properties is emphasized in the notification requirements for this NWP because of the possibility that shipwrecks may be historic properties.

***** 23. Approved Categorical Exclusions.** Activities undertaken, assisted, authorized, regulated, funded, or financed, in whole or in part, by another Federal agency or department where:

(a) That agency or department has determined, pursuant to the Council on Environmental Quality's implementing regulations for the National Environmental Policy Act (40 CFR part 1500 et seq.), that the activity is categorically excluded from the requirement to prepare an environmental impact statement or environmental assessment analysis, because it is included within a category of actions which neither individually nor cumulatively have a significant effect on the human environment; and

(b) The Office of the Chief of Engineers (Attn: CECW-CO) has concurred with that agency's or department's determination that the activity is categorically excluded and approved the activity for authorization under NWP 23.

The Office of the Chief of Engineers may require additional conditions,including pre-construction notification, for authorization of an agency's categorical exclusions under this NWP.

Notification: Certain categorical exclusions approved for authorization under this NWP require the permittee to submit a pre-construction notification to the district engineer prior to commencing the activity (see general condition 32). The activities that require pre-construction notification are listed in the appropriate Regulatory Guidance Letters. (Authorities: Sections 10 and 404)

Note: The agency or department may submit an application for an activity believed to be categorically excluded to the Office of the Chief of Engineers (Attn: CECW-CO). Prior to approval for authorization under this NWP of any agency's activity, the Office of the Chief of Engineers will solicit public comment. As of the date of issuance of this NWP, agencies with approved categorical exclusions are: the Bureau of Reclamation, Federal Highway Administration, and U.S. Coast Guard. Activities approved for authorization under this NWP as of the date of this notice are found in Corps Regulatory Guidance Letter 05-07, which is available at: http://www.usace.army.mil/Portals/2/docs/ civilworks/RGLS/rgl05-07.pdf. Any future approved categorical exclusions will be announced in Regulatory Guidance Letters and posted on this same Web site.

24. Indian Tribe or State Administered Section 404 Programs. Any activity permitted by a state or Indian Tribe administering its own section 404 permit program pursuant to 33 U.S.C. 1344(g)-(l) is permitted pursuant to Section 10 of the Rivers and Harbors Act of 1899. (Authority: Section 10)

Note 1: As of the date of the promulgation of this NWP, only New Jersey and Michigan administer their own section 404 permit programs.

Note 2: Those activities that do not involve an Indian Tribe or State section 404 permit are not included in this NWP, but certain structures will be exempted by Section 154 of Public Law 94-587, 90 Stat. 2917 (33 U.S.C. 591) (see 33 CFR 322.4(b)).

25. Structural Discharges. Discharges of material such as concrete, sand, rock, etc., into tightly sealed forms or cells where the material will be used as a structural member for standard pile supported structures, such as bridges, transmission line footings, and walkways, or for general navigation, such as mooring cells, including the excavation of bottom material from within the form prior to the discharge of concrete, sand, rock, etc. This NWP does not authorize filled structural members that would support buildings, building pads, homes, house pads, parking areas, storage areas and other such structures. The structure itself may require a separate Section 10 permit if located in navigable waters of the United States. (Authority: Section 404)

NOTE: THE IEPA HAS CONDITIONED SECTION 401 WATER QUALITY CERTIFICATION APPLICABLE TO NATIONWIDE PERMIT 25. DEPARTMENT OF THE ARMY AUTHORIZATION PURSUANT TO SECTION 404 OF THE CLEAN WATER ACT (33 U.S.C. 1344) UNDER NATIONWIDE PERMIT 25 WILL BE SUBJECT TO THE THREE GENERAL IEPA CONDITIONS, THESE NATIONWIDE SPECIFIC CONDITIONS, AND THE CONDITIONS PUBLISHED IN SECTION C.

1. The applicant shall not cause:
   A. violation of applicable provisions of the Illinois Environmental Protection Act;
   B. water pollution defined and prohibited by the Illinois Environmental Protection Act;

C. violation of applicable water quality standards of the Illinois Pollution Control Board, Title 35, Subtitle C: Water Pollution Rules and Regulation; or
D. interference with water use practices near public recreation areas or water supply intakes.

2. The applicant for Nationwide Permit 25 shall implement erosion control measures consistent with the "Illinois Urban Manual" (IEPA/USDA, NRCS; 2016).
3. Any spoil material excavated, dredged or otherwise produced must not be returned to the waterway but must be deposited in a self-contained area in compliance with all state statutes, regulations and permit requirements with no discharge to waters of the State unless a permit has been issued by this Agency. Any backfilling must be done with clean material and placed in a manner to prevent violation of applicable water quality standards.

26. [Reserved]

27. Aquatic Habitat Restoration, Establishment, and Enhancement Activities. Activities in waters of the United States associated with the restoration, enhancement, and establishment of tidal and non-tidal wetlands and riparian areas, the restoration and enhancement of non-tidal streams and other non-tidal open waters, and the rehabilitation or enhancement of tidal streams, tidal wetlands, and tidal open waters, provided those activities result in net increases in aquatic resource functions and services.

To be authorized by this NWP, the aquatic habitat restoration, enhancement, or establishment activity must be planned, designed, and implemented so that it results in aquatic habitat that resembles an ecological reference. An ecological reference may be based on the characteristics of an intact aquatic habitat or riparian area of the same type that exists in the region. An ecological reference may be based on a conceptual model developed from regional ecological knowledge of the target aquatic habitat type or riparian area.

To the extent that a Corps permit is required, activities authorized by this NWP include, but are not limited to: The removal of accumulated sediments; the installation, removal, and maintenance of small water control structures, dikes, and berms, as well as discharges of dredged or fill material to restore appropriate stream channel configurations after small water control structures, dikes, and berms, are removed; the installation of current deflectors; the enhancement, rehabilitation, or re-establishment of riffle and pool stream structure; the placement of in-stream habitat structures; modifications of the stream bed and/or banks to enhance, rehabilitate, or re-establish stream meanders; the removal of stream barriers, such as undersized culverts, fords, and grade control structures; the backfilling of artificial channels; the removal of existing drainage structures, such as drain tiles, and the filling, blocking, or reshaping of drainage ditches to restore wetland hydrology; the installation of structures or fills necessary to restore or enhance wetland or stream hydrology; the construction of small nesting islands; the construction of open water areas; the construction of oyster habitat over unvegetated bottom in tidal waters; shellfish seeding; activities needed to reestablish vegetation, including plowing or discing for seed bed preparation and the planting of appropriate wetland species; re-establishment of submerged aquatic vegetation in areas where those plant communities previously existed; re-establishment of tidal wetlands in tidal waters where those wetlands previously existed; mechanized land clearing to remove non-native invasive, exotic, or nuisance vegetation; and other related activities. Only native plant species should be planted at the site.

This NWP authorizes the relocation of non-tidal waters, including non-tidal wetlands and streams, on the project site provided there are net increases in aquatic resource functions and services.

Except for the relocation of non-tidal waters on the project site, this NWP does not authorize the conversion of a stream or natural wetlands to another aquatic habitat type (e.g., the conversion of a stream to wetland or vice versa) or uplands. Changes in wetland plant communities that occur when wetland hydrology is more fully restored during wetland rehabilitation activities are not considered a conversion to another aquatic habitat type. This NWP does not authorize stream channelization. This NWP does not authorize the relocation of tidal waters or the conversion of tidal waters, including tidal wetlands, to other aquatic uses, such as the conversion of tidal wetlands into open water impoundments.

Compensatory mitigation is not required for activities authorized by this NWP since these activities must result in net increases in aquatic resource functions and services.

Reversion. For enhancement, restoration, and establishment activities conducted: (1)In accordance with the terms and conditions of a binding stream or wetland enhancement or restoration agreement, or a wetland establishment agreement, between the landowner and the U.S. Fish and Wildlife Service (FWS), the Natural Resources Conservation Service (NRCS), the Farm Service Agency (FSA), the National Marine Fisheries Service (NMFS), the National Ocean Service (NOS), U.S. Forest Service (USFS), or their designated state cooperating agencies; (2)as voluntary wetland restoration, enhancement, and establishment actions documented by the NRCS or USDA Technical Service Provider pursuant to NRCS Field Office Technical Guide standards; or (3)on reclaimed surface coal mine lands, in accordance with a Surface Mining Control and Reclamation Act permit issued by the Office of Surface Mining Reclamation and Enforcement (OSMRE) or the applicable state agency, this NWP also authorizes any future discharge of dredged or fill material associated with the reversion of the area to its documented prior condition and use (i.e., prior to the restoration, enhancement, or establishment activities). The reversion must occur within five years after expiration of a limited term wetland restoration or establishment agreement or permit, and is authorized in these circumstances even if the discharge occurs after this NWP expires. The five-year reversion limit does not apply to agreements without time limits reached between the landowner and the FWS, NRCS, FSA, NMFS, NOS, USFS, or an appropriate state cooperating agency. This NWP also authorizes discharges of dredged or fill material in waters of the United States for the reversion of wetlands that were restored, enhanced, or established on prior-converted cropland or on uplands, in accordance with a binding agreement between the landowner and NRCS, FSA, FWS, or their designated state cooperating agencies (even though the restoration, enhancement, or establishment activity did not require a section 404 permit). The prior condition will be documented in the original agreement or permit, and the determination of

return to prior conditions will be made by the Federal agency or appropriate state agency executing the agreement or permit. Before conducting any reversion activity the permittee or the appropriate Federal or state agency must notify the district engineer and include the documentation of the prior condition. Once an area has reverted to its prior physical condition, it will be subject to whatever the Corps Regulatory requirements are applicable to that type of land at the time. The requirement that the activity results in a net increase in aquatic resource functions and services does not apply to reversion activities meeting the above conditions. Except for the activities described above, this NWP does not authorize any future discharge of dredged or fill material associated with the reversion of the area to its prior condition. In such cases a separate permit would be required for any reversion.

Reporting. For those activities that do not require pre-construction notification, the permittee must submit to the district engineer a copy of: (1) The binding stream enhancement or restoration agreement or wetland enhancement, restoration, or establishment agreement, or a project description, including project plans and location map; (2) the NRCS or USDA Technical Service Provider documentation for the voluntary stream enhancement or restoration action or wetland restoration, enhancement, or establishment action; or (3) the SMCRA permit issued by OSMRE or the applicable state agency. The report must also include information on baseline ecological conditions on the project site, such as a delineation of wetlands, streams, and/or other aquatic habitats. These documents must be submitted to the district engineer at least 30 days prior to commencing activities in waters of the United States authorized by this NWP.

Notification: The permittee must submit a pre-construction notification to the district engineer prior to commencing any activity (see General Condition 32), except for the following activities:

(1) Activities conducted on non-federal public lands and private lands, in accordance with the terms and conditions of a binding stream enhancement or restoration agreement or wetland enhancement, restoration, or establishment agreement between the landowner and the FWS, NRCS, FSA, NMFS, NOS, USFS or their designated state cooperating agencies;

(2) Voluntary stream or wetlandrestoration or enhancement action, or wetland establishment action, documented by the NRCS or USDA Technical Service Provider pursuant to NRCS Field Office Technical Guide standards; or

(3) The reclamation of surface coal mine lands, in accordance with an SMCRA permit issued by the OSMRE or the applicable state agency.

However, the permittee must submit a copy of the appropriate documentation to the district engineer to fulfill the reporting requirement. (Authorities: Sections 10 and 404)

Note: This NWP can be used to authorize compensatory mitigation projects, including mitigation banks and in-lieu fee projects. However, this NWP does not authorize the reversion of an area used for a compensatory mitigation project to its prior condition, since compensatory mitigation is generally intended to be permanent.

NOTE: THE IEPA HAS CONDITIONED SECTION 401 WATER QUALITY CERTIFICATION APPLICABLE TO NATIONWIDE PERMIT 27. DEPARTMENT OF THE ARMY AUTHORIZATION PURSUANT TO SECTION 404 OF THE CLEAN WATER ACT (33 U.S.C. 1344) UNDER NATIONWIDE PERMIT 27 WILL BE SUBJECT TO THE THREE GENERAL IEPA CONDITIONS, THIS NATIONWIDE SPECIFIC CONDITION, AND THE CONDITIONS PUBLISHED IN SECTION C.

1. All activities conducted under NWP 27 shall be in accordance with the provisions of 35 Ill. Adm. Code 405.108. Work in reclaimed surface coal mine areas are required to obtain prior authorization from the Illinois EPA for any activities that result in the use of acid-producing mine refuse.
2. The applicant shall not cause:
   A. violation of applicable provisions of the Illinois Environmental Protection Act;
   B. water pollution defined and prohibited by the Illinois Environmental Protection Act;
   C. violation of applicable water quality standards of the Illinois Pollution Control Board, Title 35, Subtitle C: Water Pollution Rules and Regulation; or
   D. interference with water use practices near public recreation areas or water supply intakes.
3. All areas affected by construction shall be mulched and seeded as soon after construction as possible. The applicant shall undertake necessary measures and procedures to reduce erosion during construction. Interim measures to prevent erosion during construction shall be taken and may include the installation of sedimentation basins and temporary mulching. All construction within the waterway shall be conducted during zero or low flow conditions. The applicant shall be responsible for obtaining an NPDES Storm Water Permit prior to initiating construction if the construction activity associated with the project will result in the disturbance of 1 (one) or more acres, total land area. An NPDES Storm Water Permit may be obtained by submitting a properly completed Notice of Intent (NOI) form by certified mail to the Agency's Division of Water Pollution Control, Permit Section

28. Modifications of Existing Marinas. Reconfiguration of existing docking facilities within an authorized marina area. No dredging, additional slips, dock spaces, or expansion of any kind within waters of the United States is authorized by this NWP. (Authority: Section 10)

29. Residential Developments. Discharges of dredged or fill material into non-tidal waters of the United States for the construction or expansion of a single residence, a multiple unit residential development, or a residential subdivision. This NWP authorizes the construction of building foundations and building pads and attendant features that are necessary for the use of the residence or residential development. Attendant features may include but are not limited to roads, parking lots, garages, yards, utility lines, storm water management facilities, septic fields, and recreation facilities such as playgrounds, playing fields, and golf courses (provided the golf course is an integral part of the residential development).

The discharge must not cause the loss of greater than 1/2-acre of non-tidal waters of the United States. The discharge must not cause the loss of more than 300 linear feet of stream bed, unless for intermittent and ephemeral stream beds the district engineer waives the 300 linear foot limit by making a written determination concluding that the discharge will result in no more

than minimal adverse environmental effects. This NWP does not authorize discharges into non-tidal wetlands adjacent to tidal waters. The loss of stream bed plus any other losses of jurisdictional wetlands and waters caused by the NWP activity cannot exceed 1/2-acre.

Subdivisions: For residential subdivisions, the aggregate total loss of waters of United States authorized by this NWP cannot exceed 1/2-acre. This includes any loss of waters of the United States associated with development of individual subdivision lots.

Notification: The permittee must submit a pre-construction notification to the district engineer prior to commencing the activity. (See General Condition 32.) (Authorities: Sections 10 and 404)

NOTE: THE IEPA HAS CONDITIONED SECTION 401 WATER QUALITY CERTIFICATION APPLICABLE TO NATIONWIDE PERMIT 29. DEPARTMENT OF THE ARMY AUTHORIZATION PURSUANT TO SECTION 404 OF THE CLEAN WATER ACT (33 U.S.C. 1344) UNDER NATIONWIDE PERMIT 29 WILL BE SUBJECT TO THE THREE GENERAL IEPA CONDITIONS, THESE NATIONWIDE SPECIFIC CONDITIONS, AND THE CONDITIONS PUBLISHED IN SECTION C.

1. The applicant shall not cause:
   A. violation of applicable provisions of the Illinois Environmental Protection Act;
   B. water pollution defined and prohibited by the Illinois Environmental Protection Act;
   C. violation of applicable water quality standards of the Illinois Pollution Control Board, Title 35, Subtitle C: Water Pollution Rules and Regulation; or
   D. interference with water use practices near public recreation areas or water supply intakes.
2. The applicant for Nationwide Permit 29 shall implement erosion control measures consistent with the "Illinois Urban Manual" (IEPA/USDA, NRCS; 2016).
3. Any spoil material excavated, dredged or otherwise produced must not be returned to the waterway but must be deposited in a self-contained area in compliance with all state statutes, regulations and permit requirements with no discharge to waters of the State unless a permit has been issued by this Agency. Any backfilling must be done with clean material and placed in a manner to prevent violation of applicable water quality standards.
4. All areas affected by construction shall be mulched and seeded as soon after construction as possible. The applicant shall undertake necessary measures and procedures to reduce erosion during construction. Interim measures to prevent erosion during construction shall be taken and may include the installation of sedimentation basins and temporary mulching. All construction within the waterway shall be conducted during zero or low flow conditions. The applicant shall be responsible for obtaining an NPDES Storm Water Permit prior to initiating construction if the construction activity associated with the project will result in the disturbance of 1 (one) or more acres, total land area. An NPDES Storm Water Permit may be obtained by submitting a properly completed Notice of Intent (NOI) form by certified mail to the Agency's Division of Water Pollution Control, Permit Section.
5. The applicant is advised that the following permit(s) must be obtained from the Illinois EPA: The applicant must obtain permits to construct sanitary sewers, water mains, and related facilities prior to construction.
6. An individual Section 401 water quality certification will be required for any project where the District Engineer waives the stream length limitation of NWP 29.

30. Moist Soil Management for Wildlife. Discharges of dredged or fill material into non-tidal waters of the United States and maintenance activities that are associated with moist soil management for wildlife for the purpose of continuing ongoing, site- specific, wildlife management activities where soil manipulation is used to manage habitat and feeding areas for wildlife. Such activities include, but are not limited to, plowing or discing to impede succession, preparing seed beds, or establishing fire breaks. Sufficient riparian areas must be maintained adjacent to all open water bodies, including streams, to preclude water quality degradation due to erosion and sedimentation. This NWP does not authorize the construction of new dikes, roads, water control structures, or similar features associated with the management areas. The activity must not result in a net loss of aquatic resource functions and services. This NWP does not authorize the conversion of wetlands to uplands, impoundments, or other open water bodies. (Authority: Section 404)

Note: The repair, maintenance, or replacement of existing water control structures or the repair or maintenance of dikes may be authorized by NWP 3. Some such activities may qualify for an exemption under section 404(f) of the Clean Water Act (see 33 CFR 323.4).

***** 31. Maintenance of Existing Flood Control Facilities.** Discharges of dredged or fill material resulting from activities associated with the maintenance of existing flood control facilities, including debris basins, retention/ detention basins, levees, and channels that: (i) Were previously authorized by the Corps by individual permit, general permit, or 33 CFR 330.3, or did not require a permit at the time they were constructed, or (ii) were constructed by the Corps and transferred to a non-federal sponsor for operation and maintenance. Activities authorized by this NWP are limited to those resulting from maintenance activities that are conducted within the ''maintenance baseline,'' as described in the definition below. Discharges of dredged or fill materials associated with maintenance activities in flood control facilities in any watercourse that have previously been determined to be within the maintenance baseline are authorized under this NWP. To the extent that a Corps permit is required, this NWP authorizes the removal of vegetation from levees associated with the flood control project. This NWP does not authorize the removal of sediment and associated vegetation from natural water courses except when these activities have been included in the maintenance baseline. All dredged and excavated material must be deposited and retained in an area that has no waters of the United States unless otherwise specifically approved by the district engineer under separate authorization. Proper sediment controls must be used.

Maintenance Baseline: The maintenance baseline is a description of the physical characteristics (e.g., depth, width, length, location, configuration, or design flood capacity, etc.) of a flood control project within which maintenance activities are normally authorized by NWP 31, subject to any case-specific conditions required by the district engineer. The district

engineer will approve the maintenance baseline based on the approved or constructed capacity of the flood control facility, whichever is smaller, including any areas where there are no constructed channels but which are part of the facility. The prospective permittee will provide documentation of the physical characteristics of the flood control facility (which will normally consist of as-built or approved drawings) and documentation of the approved and constructed design capacities of the flood control facility. If no evidence of the constructed capacity exists, the approved capacity will be used. The documentation will also include best management practices to ensure that the adverse environmental impacts caused by the maintenance activities are no more than minimal, especially in maintenance areas where there are no constructed channels. (The Corps may request maintenance records in areas where there has not been recent maintenance.) Revocation or modification of the final determination of the maintenance baseline can only be done in accordance with 33 CFR 330.5. Except in emergencies as described below, this NWP cannot be used until the district engineer approves the maintenance baseline and determines the need for mitigation and any regional or activity-specific conditions. Once determined, the maintenance baseline will remain valid for any subsequent reissuance of this NWP. This NWP does not authorize maintenance of a flood control facility that has been abandoned. A flood control facility will be considered abandoned if it has operated at a significantly reduced capacity without needed maintenance being accomplished in a timely manner. A flood control facility will not be considered abandoned if the prospective permittee is in the process of obtaining other authorizations or approvals required for maintenance activities and is experiencing delays in obtaining those authorizations or approvals.

Mitigation: The district engineer will determine any required mitigation one-time only for impacts associated with maintenance work at the same time that the maintenance baseline is approved. Such one-time mitigation will be required when necessary to ensure that adverse environmental effects are no more than minimal, both individually and cumulatively. Such mitigation will only be required once for any specific reach of a flood control project. However, if one-time mitigation is required for impacts associated with maintenance activities, the district engineer will not delay needed maintenance, provided the district engineer and the permittee establish a schedule for identification, approval, development, construction and completion of any such required mitigation. Once the one-time mitigation described above has been completed, or a determination made that mitigation is not required, no further mitigation will be required for maintenance activities within the maintenance baseline (see Note, below). In determining appropriate mitigation, the district engineer will give special consideration to natural water courses that have been included in the maintenance baseline and require mitigation and/or best management practices as appropriate.

Emergency Situations: In emergency situations, this NWP may be used to authorize maintenance activities in flood control facilities for which no maintenance baseline has been approved. Emergency situations are those which would result in an unacceptable hazard to life, a significant loss of property, or an immediate, unforeseen, and significant economic hardship if action is not taken before a maintenance baseline can be approved. In such situations, the determination of mitigation requirements, if any, may be deferred until the emergency has been resolved. Once the emergency has ended, a maintenance baseline must be established expeditiously, and mitigation, including mitigation for maintenance conducted during the emergency, must be required as appropriate.

Notification: The permittee must submit a pre-construction notification to the district engineer before any maintenance work is conducted (see general condition 32). The Pre-construction notification may be for activity-specific maintenance or for maintenance of the entire flood control facility by submitting a five-year (or less) maintenance plan. The Pre-construction notification must include a description of the maintenance baseline and the disposal site for dredged or excavated material. (Authorities: Sections 10 and 404)

Note: If the maintenance baseline was approved by the district engineer under a prior version of NWP 31, and the district engineer imposed the one-time compensatory mitigation requirement on maintenance for a specific reach of a flood control project authorized by that prior version of NWP 31, during the period this version of NWP 31 is in effect (March 19, 2017, to March 18, 2022) the district engineer will not require additional compensatory mitigation for maintenance activities authorized by this NWP in that specific reach of the flood control project.

32. Completed Enforcement Actions. Any structure, work, or discharge of dredged or fill material remaining in place or undertaken for mitigation, restoration, or environmental benefit in compliance with either:

i The terms of a final written Corps non-judicial settlement agreement resolving a violation of Section 404 of the Clean Water Act and/or Section 10 of the Rivers and Harbors Act of 1899; or the terms of an EPA 309(a) order on consent resolving a violation of section 404 of the Clean Water Act, provided that:

(a) The activities authorized by this NWP cannot adversely affect more than 5 acres of non-tidal waters or 1 acre of tidal waters;

(b) The settlement agreement provides for environmental benefits, to an equal or greater degree, than the environmental detriments caused by the unauthorized activity that is authorized by this NWP; and

(c) The district engineer issues a verification letter authorizing the activity subject to the terms and conditions of this NWP and the settlement agreement, including a specified completion date; or

ii The terms of a final Federal court decision, consent decree, or settlement agreement resulting from an enforcement action brought by the United States under section 404 of the Clean Water Act and/or Section 10 of the Rivers and Harbors Act of 1899; or

iii The terms of a final court decision, consent decree, settlement agreement, or non-judicial settlement agreement resulting from a natural resource damage claim brought by a trustee or trustees for natural resources (as defined by the National Contingency Plan at 40 CFR subpart G) under Section 311 of the Clean Water Act, Section 107 of the Comprehensive Environmental Response, Compensation and

Liability Act, Section 312 of the National Marine Sanctuaries Act, Section 1002 of the Oil Pollution Act of 1990, or the Park System Resource Protection Act at 16 U.S.C. 19jj, to the extent that a Corps permit is required.

Compliance is a condition of the NWP itself; non-compliance of the terms and conditions of an NWP 32 authorization may result in an additional enforcement action (e.g., a Class I civil administrative penalty). Any authorization under this NWP is automatically revoked if the permittee does not comply with the terms of this NWP or the terms of the court decision, consent decree, or judicial/non-judicial settlement agreement. This NWP does not apply to any activities occurring after the date of the decision, decree, or agreement that are not for the purpose of mitigation, restoration, or environmental benefit. Before reaching any settlement agreement, the Corps will ensure compliance with the provisions of 33 CFR part 326 and 33 CFR 330.6(d)(2)and (e). (Authorities: Sections 10 and 404)

NOTE: THE IEPA HAS CONDITIONED SECTION 401 WATER QUALITY CERTIFICATION APPLICABLE TO NATIONWIDE PERMIT 32. DEPARTMENT OF THE ARMY AUTHORIZATION PURSUANT TO SECTION 404 OF THE CLEAN WATER ACT (33 U.S.C. 1344) UNDER NATIONWIDE PERMIT 32 WILL BE SUBJECT TO THE THREE GENERAL IEPA CONDITIONS, THESE NATIONWIDE SPECIFIC CONDITIONS, AND THE CONDITIONS PUBLISHED IN SECTION C.

1. The applicant shall not cause:
   A. violation of applicable provisions of the Illinois Environmental Protection Act;
   B. water pollution defined and prohibited by the Illinois Environmental Protection Act;
   C. violation of applicable water quality standards of the Illinois Pollution Control Board, Title 35, Subtitle C: Water Pollution Rules and Regulation; or
   D. interference with water use practices near public recreation areas or water supply intakes.
2. The applicant shall provide adequate planning and supervision during the project construction period for implementing construction methods, processes and cleanup procedures necessary to prevent water pollution and control erosion.
3. Except as allowed under condition 9, any spoil material excavated, dredged or otherwise produced must not be returned to the waterway but must be deposited in a self-contained area in compliance with all state statutes, regulations and permit requirements with no discharge to waters of the State unless a permit has been issued by the Illinois EPA. Any backfilling must be done with clean material and placed in a manner to prevent violation of applicable water quality standards.
4. All areas affected by construction shall be mulched and seeded as soon after construction as possible. The applicant shall undertake necessary measures and procedures to reduce erosion during construction. Interim measures to prevent erosion during construction shall be taken and may include the installation of sedimentation basins and temporary mulching. All construction within the waterway shall be conducted during zero or low flow conditions. The applicant shall be responsible for obtaining an NPDES Storm Water Permit prior to initiating construction if the construction activity associated with the project will result in the disturbance of 1 (one) or more acres, total land area. An NPDES Storm Water Permit may be obtained by submitting a properly completed Notice of Intent (NOI) form by certified mail to the Agency's Division of Water Pollution Control, Permit Section.
5. The applicant for Nationwide Permit 32 shall implement erosion control measures consistent with the "Illinois Urban Manual" (IEPA/USDA, NRCS; 2016).
6. The applicant is advised that the following permit(s) must be obtained from the Illinois EPA: The applicant must obtain permits to construct sanitary sewers, water mains, and related facilities prior to construction.
7. Backfill used in the stream-crossing trench shall be predominantly sand or larger size material, with <20% passing a #230 U.S. sieve.
8. Any channel relocation shall be constructed under dry conditions and stabilized to prevent erosion prior to the diversion of flow.
9. Backfill used within trenches passing through surface water of the State, except wetland areas, shall be clean course aggregate, gravel or other material which will not cause siltation, pipe damage during placement, or chemical corrosion in place. Excavated material may be used only if:
   A. Particle size analysis is conducted and demonstrates the material to be at least 80% sand or larger size material, using a #230 U.S. sieve; or
   B. Excavation and backfilling are done under dry conditions.
10. Backfill used within trenches passing through wetland areas shall consist of clean material which will not cause siltation, pipe damage during placement, or chemical corrosion in place. Excavated material shall be used to the extent practicable, with the upper six (6) to twelve (12) inches backfilled with the topsoil obtained during trench excavation.
11. Any applicant proposing activities in a mined area or previously mined area shall provide to the IEPA a written determination regarding whether the sediment and materials that will be used are considered “acid-producing material” as defined in 35 Il. Adm. Code, Subtitle D. If considered “acid-producing material,” the applicant shall obtain a permit to construct pursuant to 35 Il. Adm. Code 404.101.
12. Asphalt, bituminous material and concrete with protruding material such as reinforcing bar or mesh shall not be 1) used for backfill, 2) placed on shorelines/stream banks, or 3) placed in waters of the State.

33. Temporary Construction, Access, and Dewatering. Temporary structures, work, and discharges, including cofferdams, necessary for construction activities or access fills or dewatering of construction sites, provided that the associated primary activity is authorized by the Corps of Engineers or the U.S. Coast Guard. This NWP also authorizes temporary structures, work, and discharges, including cofferdams, necessary for construction activities not otherwise subject to the Corps or U.S. Coast Guard permit requirements. Appropriate measures must be taken to maintain near normal downstream flows and to minimize flooding. Fill must consist of materials, and be placed in a manner, that will not be eroded by expected high flows. The use of dredged material may be allowed if the district engineer determines that it will not cause more than minimal adverse environmental effects. Following completion of construction, temporary fill

must be entirely removed to an area that has no waters of the United States, dredged material must be returned to its original location, and the affected areas must be restored to pre-construction elevations. The affected areas must also be revegetated, as appropriate. This permit does not authorize the use of cofferdams to dewater wetlands or other aquatic areas to change their use. Structures left in place after construction is completed require a separate Section 10 permit if located in navigable waters of the United States. (See 33 CFR part 322.)

Notification: The permittee must submit a pre-construction notification to the district engineer prior to commencing the activity if the activity is conducted in navigable waters of the United States (i.e., Section 10 waters) (see general condition 32). The pre-construction notification must include a restoration plan showing how all temporary fills and structures will be removed and the area restored to pre- project conditions. (Authorities: Sections 10 and 404)

NOTE: THE IEPA HAS CONDITIONED SECTION 401 WATER QUALITY CERTIFICATION APPLICABLE TO NATIONWIDE PERMIT 33. DEPARTMENT OF THE ARMY AUTHORIZATION PURSUANT TO SECTION 404 OF THE CLEAN WATER ACT (33 U.S.C. 1344) UNDER NATIONWIDE PERMIT 33 WILL BE SUBJECT TO THE THREE GENERAL IEPA CONDITIONS, THESE NATIONWIDE SPECIFIC CONDITIONS, AND THE CONDITIONS PUBLISHED IN SECTION C.

1. Any spoil material excavated, dredged or otherwise produced must not be returned to the waterway but must be deposited in a self-contained area in compliance with all state statutes, as determined by the Illinois EPA.
2. Any backfilling must be done with clean material and placed in a manner to prevent violation of applicable water quality standards.
3. The applicant shall not cause:
   A. violation of applicable provisions of the Illinois Environmental Protection Act;
   B. water pollution defined and prohibited by the Illinois Environmental Protection Act;
   C. violation of applicable water quality standards of the Illinois Pollution Control Board, Title 35, Subtitle C: Water Pollution Rules and Regulation; or
   D. interference with water use practices near public recreation areas or water supply intakes.
4. All areas affected by construction shall be mulched and seeded as soon after construction as possible. The applicant shall undertake necessary measures and procedures to reduce erosion during construction. Interim measures to prevent erosion during construction shall be taken and may include the installation of sedimentation basins and temporary mulching. All construction within the waterway shall be conducted during zero or low flow conditions. The applicant shall be responsible for obtaining an NPDES Storm Water Permit prior to initiating construction if the construction activity associated with the project will result in the disturbance of 1 (one) or more acres, total land area. An NPDES Storm Water Permit may be obtained by submitting a properly completed Notice of Intent (NOI) form by certified mail to the Agency's Division of Water Pollution Control, Permit Section.
5. The applicant for Nationwide Permit 33 shall implement erosion control measures consistent with the "Illinois Urban Manual" (IEPA/USDA, NRCS; 2016).
6. Temporary work pads, cofferdams, access roads and other temporary fills shall be constructed of clean coarse aggregate or non-erodible non-earthen fill material that will not cause siltation. Sandbags, pre-fabricated rigid materials, sheet piling, inflatable bladders and fabric lined basins may be used for temporary facilities.
7. The applicant for Nationwide Permit 33 who uses temporary work pads, cofferdams, access roads and other temporary fills in order to perform work in creeks, streams, or rivers shall maintain flow in these waters by utilizing dam and pumping, fluming, culverts or other such techniques.
8. During dewatering of the coffered work area, all sediment-laden water shall have adequate sediment removed such that water quality standards, including preventing unnatural turbidity, are met in the receiving stream.

***** 34. Cranberry Production Activities.** Discharges of dredged or fill material for dikes, berms, pumps, water control structures or leveling of cranberry beds associated with expansion, enhancement, or modification activities at existing cranberry production operations. The cumulative total acreage of disturbance per cranberry production operation, including but not limited to, filling, flooding, ditching, or clearing, must not exceed 10 acres of waters of the United States, including wetlands. The activity must not result in a net loss of wetland acreage. This NWP does not authorize any discharge of dredged or fill material related to other cranberry production activities such as warehouses, processing facilities, or parking areas. For the purposes of this NWP, the cumulative total of 10 acres will be measured over the period that this NWP is valid.

Notification: The permittee must submit a pre-construction notification to the district engineer once during the period that this NWP is valid, and the NWP will then authorize discharges of dredge or fill material at an existing operation for the permit term, provided the 10-acre limit is not exceeded. (See general condition 32.) (Authority: Section 404)

35. Maintenance Dredging of Existing Basins. The removal of accumulated sediment for maintenance of existing marina basins, access channels to marinas or boat slips, and boat slips to previously authorized depths or controlling depths for ingress/egress, whichever is less. All dredged material must be deposited and retained in an area that has no waters of the United States unless otherwise specifically approved by the district engineer under separate authorization. Proper sediment controls must be used for the disposal site.
(Authority: Section 10)

36. Boat Ramps. Activities required for the construction of boat ramps, provided the activity meets all of the following criteria:

(a) The discharge into waters of the United States does not exceed 50 cubic yards of concrete, rock, crushed stone or gravel into forms, or in the form of pre-cast concrete planks or slabs, unless the district engineer waives the 50

cubic yard limit by making a written determination concluding that the discharge will result in no more than minimal adverse environmental effects;

(b) The boat ramp does not exceed 20 feet in width, unless the district engineer waives this criterion by making a written determination concluding that the discharge will result in no more than minimal adverse environmental effects;

(c) The base material is crushed stone, gravel or other suitable material;

(d) The excavation is limited to the area necessary for site preparation and all excavated material is removed to an area that has no waters of the United States; and,

(e) No material is placed in special aquatic sites, including wetlands.

The use of unsuitable material that is structurally unstable is not authorized. If dredging in navigable waters of the United States is necessary to provide access to the boat ramp, the dredging must be authorized by another NWP, a regional general permit, or an individual permit.

Notification: The permittee must submit a pre-construction notification to the district engineer prior to commencing the activity if: (1) The discharge into waters of the United States exceeds 50 cubic yards, or (2) the boat ramp exceeds 20 feet in width. (See general condition 32.) (Authorities: Sections 10 and 404)

NOTE: THE IEPA HAS CONDITIONED SECTION 401 WATER QUALITY CERTIFICATION APPLICABLE TO NATIONWIDE PERMIT 36. DEPARTMENT OF THE ARMY AUTHORIZATION PURSUANT TO SECTION 404 OF THE CLEAN WATER ACT (33 U.S.C. 1344) UNDER NATIONWIDE PERMIT 36 WILL BE SUBJECT TO THE THREE GENERAL IEPA CONDITIONS, THESE NATIONWIDE SPECIFIC CONDITIONS, AND THE CONDITIONS PUBLISHED IN SECTION C.

1. The applicant shall not cause:
   A. violation of applicable provisions of the Illinois Environmental Protection Act;
   B. water pollution defined and prohibited by the Illinois Environmental Protection Act;
   C. violation of applicable water quality standards of the Illinois Pollution Control Board, Title 35, Subtitle C: Water Pollution Rules and Regulation; or
   D. interference with water use practices near public recreation areas or water supply intakes.
2. The applicant for Nationwide Permit 36 shall implement erosion control measures consistent with the "Illinois Urban Manual" (IEPA/USDA, NRCS; 2016).
3. Any spoil material excavated, dredged or otherwise produced must not be returned to the waterway but must be deposited in a self-contained area in compliance with all state statutes, regulations and permit requirements with no discharge to waters of the State unless a permit has been issued by this Agency. Any backfilling must be done with clean material and placed in a manner to prevent violation of applicable water quality standards.
4. All areas affected by construction shall be mulched and seeded as soon after construction as possible. The applicant shall undertake necessary measures and procedures to reduce erosion during construction. Interim measures to prevent erosion during construction shall be taken and may include the installation of sedimentation basins and temporary mulching. All construction within the waterway shall be conducted during zero or low flow conditions. The applicant shall be responsible for obtaining an NPDES Storm Water Permit prior to initiating construction if the construction activity associated with the project will result in the disturbance of 1 (one) or more acres, total land area. An NPDES Storm Water Permit may be obtained by submitting a properly completed Notice of Intent (NOI) form by certified mail to the Agency's Division of Water Pollution Control, Permit Section.

***** 37. Emergency Watershed Protection and Rehabilitation.** Work done by or funded by:

(a) The Natural Resources Conservation Service for a situation requiring immediate action under its emergency Watershed Protection Program (7 CFR part 624);

(b) The U.S. Forest Service under its Burned-Area Emergency Rehabilitation Handbook (FSH 2509.13);

(c) The Department of the Interior for wildland fire management burned area emergency stabilization and rehabilitation (DOI Manual part 620, Ch. 3);

(d) The Office of Surface Mining, or states with approved programs, for abandoned mine land reclamation activities under Title IV of the Surface Mining Control and Reclamation Act (30 CFR subchapter R), where the activity does not involve coal extraction; or

(e) The Farm Service Agency under its Emergency Conservation Program (7 CFR part 701).

In general, the prospective permittee should wait until the district engineer issues an NWP verification or 45 calendar days have passed before proceeding with the watershed protection and rehabilitation activity. However, in cases where there is an unacceptable hazard to life or a significant loss of property or economic hardship will occur, the emergency watershed protection and rehabilitation activity may proceed immediately and the district engineer will consider the information in the pre-construction notification and any comments received as a result of agency coordination todecide whether the NWP 37 authorization should be modified, suspended, or revoked in accordance with the procedures at 33 CFR 330.5.

Notification: Except in cases where there is an unacceptable hazard to life or a significant loss of property or economic hardship will occur, the permittee must submit a pre-construction notification to the district engineer prior to commencing the activity (see general condition 32). (Authorities: Sections 10 and 404)

38. Cleanup of Hazardous and Toxic Waste. Specific activities required to effect the containment, stabilization, or removal of hazardous or toxic waste materials that are performed, ordered, or sponsored by a government agency with established legal or regulatory authority. Court ordered remedial action plans or related settlements are also authorized by this NWP. This NWP does not authorize the establishment of new disposal sites or the expansion of existing sites used for the disposal of hazardous or toxic waste.

Notification: The permittee must submit a pre-construction notification to the district engineer prior to commencing the activity. (See general condition 32.) (Authorities: Sections 10 and 404)

Note: Activities undertaken entirely on a Comprehensive Environmental Response, Compensation, and Liability Act (CERCLA) site by authority of CERCLA as approved or required by EPA, are not required to obtain permits under Section 404 of the Clean Water Act or Section 10 of the Rivers and Harbors Act.

NOTE: THE IEPA HAS CONDITIONED SECTION 401 WATER QUALITY CERTIFICATION APPLICABLE TO NATIONWIDE PERMIT 38. DEPARTMENT OF THE ARMY AUTHORIZATION PURSUANT TO SECTION 404 OF THE CLEAN WATER ACT (33 U.S.C. 1344) UNDER NATIONWIDE PERMIT 38 WILL BE SUBJECT TO THE THREE GENERAL IEPA CONDITIONS, THESE NATIONWIDE SPECIFIC CONDITIONS, AND THE CONDITIONS PUBLISHED IN SECTION C.

1. The applicant shall not cause:
   A. violation of applicable provisions of the Illinois Environmental Protection Act;
   B. water pollution defined and prohibited by the Illinois Environmental Protection Act;
   C. violation of applicable water quality standards of the Illinois Pollution Control Board, Title 35, Subtitle C: Water Pollution Rules and Regulation; or
   D. interference with water use practices near public recreation areas or water supply intakes.
2. In addition to any actions required of the NWP applicant with respect to the “Notification” General Condition 32, the applicant shall notify the Illinois EPA, Bureau of Water, of the specific activity. This notification shall include information concerning the orders and approvals that have been or will be obtained from the Illinois EPA Bureau of Land (BOL), for all cleanup activities under BOL jurisdiction or for which authorization or approval is sought from BOL for no further remedial action.
3. An individual Section 401 water quality certification will be required for activities that do not require or will not receive authorization or approval from the BOL.

39. Commercial and Institutional Developments. Discharges of dredged or fill material into non-tidal waters of the United States for the construction or expansion of commercial and institutional building foundations and building pads and attendant features that are necessary for the use and maintenance of the structures. Attendant features may include, but are not limited to, roads, parking lots, garages, yards, utility lines, storm water management facilities, wastewater treatment facilities, and recreation facilities such as playgrounds and playing fields. Examples of commercial developments include retail stores, industrial facilities, restaurants, business parks, and shopping centers. Examples of institutional developments include schools, fire stations, government office buildings, judicial buildings, public works buildings, libraries, hospitals, and places of worship. The construction of new golf courses and new ski areas is not authorized by this NWP.

The discharge must not cause the loss of greater than 1/2-acre of non-tidal waters of the United States. The discharge must not cause the loss of more than 300 linear feet of stream bed, unless for intermittent and ephemeral stream beds the district engineer waives the 300 linear foot limit by making a written determination concluding that the discharge will result in no more than minimal adverse environmental effects. The loss of stream bed plus any other losses of jurisdictional wetlands and waters caused by the NWP activity cannot exceed 1/2-acre. This NWP does not authorize discharges into non-tidal wetlands adjacent to tidal waters.

Notification: The permittee must submit a pre-construction notification to the district engineer prior to commencing the activity. (See general condition 32.) (Authorities: Sections 10 and 404)

Note: For any activity that involves the construction of a wind energy generating structure, solar tower, or overhead transmission line, a copy of the PCN and NWP verification will be provided to the Department of Defense Siting Clearinghouse, which will evaluate potential effects on military activities.

NOTE: THE IEPA HAS CONDITIONED SECTION 401 WATER QUALITY CERTIFICATION APPLICABLE TO NATIONWIDE PERMIT 39. DEPARTMENT OF THE ARMY AUTHORIZATION PURSUANT TO SECTION 404 OF THE CLEAN WATER ACT (33 U.S.C. 1344) UNDER NATIONWIDE PERMIT 39 WILL BE SUBJECT TO THE THREE GENERAL IEPA CONDITIONS, THESE NATIONWIDE SPECIFIC CONDITIONS, AND THE CONDITIONS PUBLISHED IN SECTION C.

1. The applicant shall not cause:
   A. violation of applicable provisions of the Illinois Environmental Protection Act;
   B. water pollution defined and prohibited by the Illinois Environmental Protection Act;
   C. violation of applicable water quality standards of the Illinois Pollution Control Board, Title 35, Subtitle C: Water Pollution Rules and Regulation; or
   D. interference with water use practices near public recreation areas or water supply intakes.
2. The applicant for Nationwide Permit 39 shall implement erosion control measures consistent with the "Illinois Urban Manual" (IEPA/USDA, NRCS; 2016).
3. Any spoil material excavated, dredged or otherwise produced must not be returned to the waterway but must be deposited in a self-contained area in compliance with all state statutes, regulations and permit requirements with no discharge to waters of the State unless a permit has been issued by this Agency. Any backfilling must be done with clean material and placed in a manner to prevent violation of applicable water quality standards.
4. All areas affected by construction shall be mulched and seeded as soon after construction as possible. The applicant shall undertake necessary measures and procedures to reduce erosion during construction. Interim measures to prevent erosion during construction shall be taken and may include the installation of sedimentation basins and temporary mulching. All construction within the waterway shall be conducted during zero or low flow conditions. The applicant shall be responsible for obtaining an NPDES Storm Water Permit prior to initiating construction if the construction activity associated with the project will result in the disturbance of 1 (one) or more acres, total land area. An NPDES Storm Water Permit may be

obtained by submitting a properly completed Notice of Intent (NOI) form by certified mail to the Agency's Division of Water Pollution Control, Permit Section.
5. The applicant is advised that the following permit(s) must be obtained from the Illinois EPA: The applicant must obtain permits to construct sanitary sewers, water mains, water treatment plants, wastewater treatment plants and related facilities prior to construction.
6. An individual Section 401 water quality certification will be required for any project where the District Engineer waives the stream length limitation of NWP 39.
7. For construction of oil and gas wells, the impacted waters of the State shall be restored to pre-construction conditions within six months after construction is started. For purposes of this condition, restoration includes stabilization and seeding or planting of vegetation on the disturbed areas that were vegetated prior to construction.

40. Agricultural Activities. Discharges of dredged or fill material into non-tidal waters of the United States for agricultural activities, including the construction of building pads for farm buildings. Authorized activities include the installation, placement, or construction of drainage tiles, ditches, or levees; mechanized land clearing; land leveling; the relocation of existing serviceable drainage ditches constructed in waters of the United States; and similar activities.

This NWP also authorizes the construction of farm ponds in non-tidal waters of the United States, excluding perennial streams, provided the farm pond is used solely for agricultural purposes. This NWP does not authorize the construction of aquaculture ponds.

This NWP also authorizes discharges of dredged or fill material into non-tidal waters of the United States to relocate existing serviceable drainage ditches constructed in non-tidal streams. The discharge must not cause the loss of greater than 1/2-acre of non-tidal waters of the United States.

The discharge must not cause the loss of more than 300 linear feet of stream bed, unless for intermittent and ephemeral stream beds the district engineer waives the 300 linear foot limit by making a written determination concluding that the discharge will result in no more than minimal adverse environmental effects. The loss of stream bed plus any other losses of jurisdictional wetlands and waters caused by the NWP activity cannot exceed 1/2-acre. This NWP does not authorize discharges into non-tidal wetlands adjacent to tidal waters.

Notification: The permittee must submit a pre-construction notification to the district engineer prior to commencing the activity. (See general condition 32.) (Authorities: Section 404)

Note: Some discharges for agricultural activities may qualify for an exemption under Section 404(f) of the Clean Water Act (see 33 CFR 323.4). This NWP authorizes the construction of farm ponds that do not qualify for the Clean Water Act section 404(f)(1)(C) exemption because of the recapture provision at section 404(f)(2).

NOTE: THE IEPA HAS CONDITIONED SECTION 401 WATER QUALITY CERTIFICATION APPLICABLE TO NATIONWIDE PERMIT 40. DEPARTMENT OF THE ARMY AUTHORIZATION PURSUANT TO SECTION 404 OF THE CLEAN WATER ACT (33 U.S.C. 1344) UNDER NATIONWIDE PERMIT 40 WILL BE SUBJECT TO THE THREE GENERAL IEPA CONDITIONS, THESE NATIONWIDE SPECIFIC CONDITIONS, AND THE CONDITIONS PUBLISHED IN SECTION C.

1. The applicant shall not cause:
   A. violation of applicable provisions of the Illinois Environmental Protection Act;
   B. water pollution defined and prohibited by the Illinois Environmental Protection Act;
   C. violation of applicable water quality standards of the Illinois Pollution Control Board, Title 35, Subtitle C: Water Pollution Rules and Regulation; or
   D. interference with water use practices near public recreation areas or water supply intakes.
2. The applicant for Nationwide Permit 40 shall implement erosion control measures consistent with the "Illinois Urban Manual" (IEPA/USDA, NRCS; 2016).
3. Any spoil material excavated, dredged or otherwise produced must not be returned to the waterway but must be deposited in a self-contained area in compliance with all state statutes, regulations and permit requirements with no discharge to waters of the State unless a permit has been issued by this Agency. Any backfilling must be done with clean material and placed in a manner to prevent violation of applicable water quality standards.
4. All areas affected by construction shall be mulched and seeded as soon after construction as possible. The applicant shall undertake necessary measures and procedures to reduce erosion during construction. Interim measures to prevent erosion during construction shall be taken and may include the installation of sedimentation basins and temporary mulching. All construction within the waterway shall be conducted during zero or low flow conditions. The applicant shall be responsible for obtaining an NPDES Storm Water Permit prior to initiating construction if the construction activity associated with the project will result in the disturbance of 1 (one) or more acres, total land area. An NPDES Storm Water Permit may be obtained by submitting a properly completed Notice of Intent (NOI) form by certified mail to the Agency's Division of Water Pollution Control, Permit Section.

41. Reshaping Existing Drainage Ditches. Discharges of dredged or fill material into non-tidal waters of the United States, excluding non-tidal wetlands adjacent to tidal waters, to modify the cross-sectional configuration of currently serviceable drainage ditches constructed in waters of the United States, for the purpose of improving water quality by regrading the drainage ditch with gentler slopes, which can reduce erosion, increase growth of vegetation, and increase uptake of nutrients and other substances by vegetation. The reshaping of the ditch cannot increase drainage capacity beyond the original as-built capacity nor can it expand the area drained by the ditch as originally constructed (i.e., the capacity of the ditch must be the same as originally constructed and it cannot drain additional wetlands or other waters of the United States). Compensatory mitigation is not required because the work is designed to improve water quality.

This NWP does not authorize the relocation of drainage ditches constructed in waters of the United States; the location of the centerline of the reshaped drainage ditch must be

approximately the same as the location of the centerline of the original drainage ditch. This NWP does not authorize stream channelization or stream relocation projects. (Authority: Section 404)

NOTE: THE IEPA HAS CONDITIONED SECTION 401 WATER QUALITY CERTIFICATION APPLICABLE TO NATIONWIDE PERMIT 41. DEPARTMENT OF THE ARMY AUTHORIZATION PURSUANT TO SECTION 404 OF THE CLEAN WATER ACT (33 U.S.C. 1344) UNDER NATIONWIDE PERMIT 41 WILL BE SUBJECT TO THE THREE GENERAL IEPA CONDITIONS, THESE NATIONWIDE SPECIFIC CONDITIONS, AND THE CONDITIONS PUBLISHED IN SECTION C.

1. The applicant shall not cause:
   A. violation of applicable provisions of the Illinois Environmental Protection Act;
   B. water pollution defined and prohibited by the Illinois Environmental Protection Act;
   C. violation of applicable water quality standards of the Illinois Pollution Control Board, Title 35, Subtitle C: Water Pollution Rules and Regulation; or
   D. interference with water use practices near public recreation areas or water supply intakes.
2. The applicant for Nationwide Permit 41 shall provide adequate planning and supervision during the project construction period for implementing construction methods, processes and cleanup procedures necessary to prevent water pollution and control erosion.
3. Any spoil material excavated, dredged or otherwise produced must not be returned to the waterway but must be deposited in a self-contained area in compliance with all state statutes, regulations and permit requirements with no discharge to waters of the State unless a permit has been issued by the Illinois EPA. Any backfilling must be done with clean material and placed in a manner to prevent violation of applicable water quality standards.
4. All areas affected by construction shall be mulched and seeded as soon after construction as possible. The applicant shall undertake necessary measures and procedures to reduce erosion during construction. Interim measures to prevent erosion during construction shall be taken and may include the installation of sedimentation basins and temporary mulching. All construction within the waterway shall be conducted during zero or low flow conditions. The applicant shall be responsible for obtaining an NPDES Storm Water Permit prior to initiating construction if the construction activity associated with the project will result in the disturbance of 1 (one) or more acres, total land area. An NPDES Storm Water Permit may be obtained by submitting a properly completed Notice of Intent (NOI) form by certified mail to the Agency's Division of Water Pollution Control, Permit Section.
5. The applicant for Nationwide Permit 41 shall implement erosion control measures consistent with the "Illinois Urban Manual" (IEPA/USDA, NRCS; 2016).
6. The applicant is advised that the following permit(s) must be obtained from the Agency: permits to construct sanitary sewers, water mains and related facilities prior to construction.
7. The proposed work shall be constructed with adequate erosion control measures (i.e., silt fences, etc.) to prevent transport of sediment and materials to the adjoining wetlands and/or streams.

42. Recreational Facilities. Discharges of dredged or fill material into non-tidal waters of the United States for the construction or expansion of recreational facilities. Examples of recreational facilities that may be authorized by this NWP include playing fields (e.g., football fields, baseball fields), basketball courts, tennis courts, hiking trails, bike paths, golf courses, ski areas, horse paths, nature centers, and campgrounds (excluding recreational vehicle parks). This NWP also authorizes the construction or expansion of small support facilities, such as maintenance and storage buildings and stables that are directly related to the recreational activity, but it does not authorize the construction of hotels, restaurants, racetracks, stadiums, arenas, or similar facilities.

The discharge must not cause the loss of greater than 1/2-acre of non-tidal waters of the United States. The discharge must not cause the loss of more than 300 linear feet of stream bed, unless for intermittent and ephemeral stream beds the district engineer waives the 300 linear foot limit by making a written determination concluding that the discharge will result in no more than minimal adverse environmental effects. The loss of stream bed plus any other losses of jurisdictional wetlands and waters caused by the NWP activity cannot exceed 1/2-acre. This NWP does not authorize discharges into non-tidal wetlands adjacent to tidal waters.

Notification: The permittee must submit a pre-construction notification to the district engineer prior to commencing the activity. (See general condition 32.) (Authority: Section 404)

NOTE: THE IEPA HAS CONDITIONED SECTION 401 WATER QUALITY CERTIFICATION APPLICABLE TO NATIONWIDE PERMIT 42. DEPARTMENT OF THE ARMY AUTHORIZATION PURSUANT TO SECTION 404 OF THE CLEAN WATER ACT (33 U.S.C. 1344) UNDER NATIONWIDE PERMIT 42 WILL BE SUBJECT TO THE THREE GENERAL IEPA CONDITIONS, THESE NATIONWIDE SPECIFIC CONDITIONS, AND THE CONDITIONS PUBLISHED IN SECTION C.

1. The applicant shall not cause:
   A. violation of applicable provisions of the Illinois Environmental Protection Act;
   B. water pollution defined and prohibited by the Illinois Environmental Protection Act;
   C. violation of applicable water quality standards of the Illinois Pollution Control Board, Title 35, Subtitle C: Water Pollution Rules and Regulation; or
   D. interference with water use practices near public recreation areas or water supply intakes.
2. The applicant for Nationwide Permit 42 shall implement erosion control measures consistent with the "Illinois Urban Manual" (IEPA/USDA, NRCS; 2016).
3. Any spoil material excavated, dredged or otherwise produced must not be returned to the waterway but must be deposited in a self-contained area in compliance with all state statutes, regulations and permit requirements with no discharge to waters of the State unless a permit has been issued by this Agency. Any backfilling must be done with clean material and placed in a manner to prevent violation of applicable water quality standards.
4. All areas affected by construction shall be mulched and seeded as soon after construction as possible. The applicant shall undertake necessary measures and procedures to reduce erosion during construction. Interim measures to prevent erosion during construction shall be taken

and may include the installation of sedimentation basins and temporary mulching. All construction within the waterway shall be conducted during zero or low flow conditions. The applicant shall be responsible for obtaining an NPDES Storm Water Permit prior to initiating construction if the construction activity associated with the project will result in the disturbance of 1 (one) or more acres, total land area. An NPDES Storm Water Permit may be obtained by submitting a properly completed Notice of Intent (NOI) form by certified mail to the Agency's Division of Water Pollution Control, Permit Section.
5. An individual Section 401 water quality certification will be required for any project where the District Engineer waives the stream length limitation of NWP 42.

43. Stormwater Management Facilities. Discharges of dredged or fill material into non-tidal waters of the United States for the construction of stormwater management facilities, including stormwater detention basins and retention basins and other stormwater management facilities; the construction of water control structures, outfall structures and emergency spillways; the construction of low impact development integrated management features such as bioretention facilities (e.g., rain gardens), vegetated filter strips, grassed swales, and infiltration trenches; and the construction of pollutant reduction green infrastructure features designed to reduce inputs of sediments, nutrients, and other pollutants into waters to meet reduction targets established under Total Daily Maximum Loads set under the Clean Water Act.

This NWP authorizes, to the extent that a section 404 permit is required, discharges of dredged or fill material into non-tidal waters of the United States for the maintenance of stormwater management facilities, low impact development integrated management features, and pollutant reduction green infrastructure features. The maintenance of stormwater management facilities, low impact development integrated management features, and pollutant reduction green infrastructure features that are not waters of the United States does not require a section 404 permit.

The discharge must not cause the loss of greater than 1/2-acre of non-tidal waters of the United States. The discharge must not cause the loss of more than 300 linear feet of stream bed, unless for intermittent and ephemeral stream beds the district engineer waives the 300 linear foot limit by making a written determination concluding that the discharge will result in no more than minimal adverse environmental effects. This NWP does not authorize discharges into non-tidal wetlands adjacent to tidal waters. The loss of stream bed plus any other losses of jurisdictional wetlands and waters caused by the NWP activity cannot exceed 1/2-acre. This NWP does not authorize discharges of dredged or fill material for the construction of new stormwater management facilities in perennial streams.

Notification: For discharges into non-tidal waters of the United States for the construction of new stormwater management facilities or pollutant reduction green infrastructure features, or the expansion of existing stormwater management facilities or pollutant reduction green infrastructure features, the permittee must submit a pre-construction notification to the district engineer prior to commencing the activity. (See general condition 32.) Maintenance activities do not require pre-construction notification if they are limited to restoring the original design capacities of the stormwater management facility or pollutant reduction green infrastructure feature. (Authority: Section 404))

NOTE: THE IEPA HAS CONDITIONED SECTION 401 WATER QUALITY CERTIFICATION APPLICABLE TO NATIONWIDE PERMIT 43. DEPARTMENT OF THE ARMY AUTHORIZATION PURSUANT TO SECTION 404 OF THE CLEAN WATER ACT (33 U.S.C. 1344) UNDER NATIONWIDE PERMIT 43 WILL BE SUBJECT TO THE THREE GENERAL IEPA CONDITIONS, THESE NATIONWIDE SPECIFIC CONDITIONS, AND THE CONDITIONS PUBLISHED IN SECTION C.

1. The Agency hereby issues Section 401 water quality certification of Nationwide Permit 43 exclusively for the construction and maintenance of pollutant reduction green infrastructure features designed to reduce inputs of sediments, nutrients, and other pollutants into waters to meet reduction targets established under Total Daily Maximum Loads set under the Clean Water Act. All other activities authorized under this Nationwide Permit are denied Section 401 water quality certification. For purposes of this water quality certification green infrastructure means wet weather management approaches and technologies that utilize, enhance or mimic the natural hydrologic cycle processes of infiltration, evapotranspiration and reuse. Green infrastructure approaches currently in use include green roofs, trees and tree boxes, rain gardens, vegetated swales, pocket wetlands, infiltration planters, porous and permeable pavements, porous piping systems, dry wells, vegetated median strips, reforestation/revegetation, rain barrels and cisterns and protection and enhancement of riparian buffers and floodplains. Material excavated, dredged or produced from the maintenance of green infrastructure features shall not be discharged to waters of the State.
2. The applicant for Nationwide Permit 43 shall not cause:
   A. violation of applicable provisions of the Illinois Environmental Protection Act;
   B. water pollution defined and prohibited by the Illinois Environmental Protection Act;
   C. violation of applicable water quality standards of the Illinois Pollution Control Board, Title 35, Subtitle C: Water Pollution Rules and Regulation; or
   D. interference with water use practices near public recreation areas or water supply intakes.
3. The applicant for Nationwide Permit 43 shall implement erosion control measures consistent with the "Illinois Urban Manual" (IEPA/USDA, NRCS; 2016).
4. Any spoil material excavated, dredged or otherwise produced must not be returned to the waterway but must be deposited in a self-contained area in compliance with all state statutes, regulations and permit requirements with no discharge to waters of the State unless a permit has been issued by this Agency. Any backfilling must be done with clean material and placed in a manner to prevent violation of applicable water quality standards.
5. All areas affected by construction shall be mulched and seeded as soon after construction as possible. The applicant shall undertake necessary measures and procedures to reduce erosion during construction. Interim measures to prevent erosion during construction shall be taken and may include the installation of sedimentation basins and temporary mulching. All construction within the waterway shall be conducted during zero or low flow conditions. The

applicant shall be responsible for obtaining an NPDES Storm Water Permit prior to initiating construction if the construction activity associated with the project will result in the disturbance of 1 (one) or more acres, total land area. An NPDES Storm Water Permit may be obtained by submitting a properly completed Notice of Intent (NOI) form by certified mail to the Agency's Division of Water Pollution Control, Permit Section.

44. Mining Activities. Discharges of dredged or fill material into non-tidal waters of the United States for mining activities, except for coal mining activities, provided the activity meets all of the following criteria:

(a) For mining activities involving discharges of dredged or fill material into non-tidal wetlands, the discharge must not cause the loss of greater than 1/2-acre of non-tidal wetlands;

(b) For mining activities involving discharges of dredged or fill material in non-tidal open waters (e.g., rivers, streams, lakes, and ponds) the mined area, including permanent and temporary impacts due to discharges of dredged or fill material into jurisdictional waters, must not exceed 1/2-acre; and

(c) The acreage loss under paragraph (a) plus the acreage impact under paragraph (b) does not exceed 1/2-acre.

The discharge must not cause the loss of more than 300 linear feet of stream bed, unless for intermittent and ephemeral stream beds the district engineer waives the 300 linear foot limit by making a written determination concluding that the discharge will result in no more than minimal adverse environmental effects.

The loss of stream bed plus any other losses of jurisdictional wetlands and waters caused by the NWP activity cannot exceed 1/2-acre.

This NWP does not authorize discharges into non-tidal wetlands adjacent to tidal waters.

Notification: The permittee must submit a pre-construction-notification to the district engineer prior to commencing the activity. (See general condition 32.) If reclamation is required by other statutes, then a copy of the final reclamation plan must be submitted with the pre-construction notification. (Authorities: Sections 10 and 404)

NOTE: THE IEPA HAS CONDITIONED SECTION 401 WATER QUALITY CERTIFICATION APPLICABLE TO NATIONWIDE PERMIT 44. DEPARTMENT OF THE ARMY AUTHORIZATION PURSUANT TO SECTION 404 OF THE CLEAN WATER ACT (33 U.S.C. 1344) UNDER NATIONWIDE PERMIT 44 WILL BE SUBJECT TO THE THREE GENERAL IEPA CONDITIONS, THESE NATIONWIDE SPECIFIC CONDITIONS, AND THE CONDITIONS PUBLISHED IN SECTION C.

1. The applicant shall not cause:
   A. violation of applicable provisions of the Illinois Environmental Protection Act;
   B. water pollution defined and prohibited by the Illinois Environmental Protection Act;
   C. violation of applicable water quality standards of the Illinois Pollution Control Board, Title 35, Subtitle C: Water Pollution Rules and Regulation; or
   D. interference with water use practices near public recreation areas or water supply intakes.
2. The applicant for Nationwide Permit 44 shall implement erosion control measures consistent with the "Illinois Urban Manual" (IEPA/USDA, NRCS; 2016).
3. Any spoil material excavated, dredged or otherwise produced must not be returned to the waterway but must be deposited in a self-contained area in compliance with all state statutes, regulations and permit requirements with no discharge to waters of the State unless a permit has been issued by this Agency. Any backfilling must be done with clean material and placed in a manner to prevent violation of applicable water quality standards.
4. The facility shall be covered by either a Subtitle D NPDES mining permit or a Subtitle D State Construction and Operating Permit for mining activities.
5. An individual Section 401 water quality certification will be required for any project where the District Engineer waives the stream length limitation of NWP 44.

45. Repair of Uplands Damaged by Discrete Events. This NWP authorizes discharges of dredged or fill material, including dredging or excavation, into all waters of the United States for activities associated with the restoration of upland areas damaged by storms, floods, or other discrete events. This NWP authorizes bank stabilization to protect the restored uplands. The restoration of the damaged areas, including any bank stabilization, must not exceed the contours, or ordinary high water mark, that existed before the damage occurred. The district engineer retains the right to determine the extent of the pre-existing conditions and the extent of any restoration work authorized by this NWP. The work must commence, or be under contract to commence, within two years of the date of damage, unless this condition is waived in writing by the district engineer. This NWP cannot be used to reclaim lands lost to normal erosion processes over an extended period.

This NWP does not authorize beach restoration or nourishment.

Minor dredging is limited to the amount necessary to restore the damaged upland area and should not significantly alter the pre-existing bottom contours of the waterbody.

Notification: The permittee must submit a pre-construction notification to the district engineer (see general condition 32) within 12 months of the date of the damage; for major storms, floods, or other discrete events, the district engineer may waive the 12- month limit for submitting a pre-construction notification if the permittee can demonstrate funding, contract, or other similar delays. The pre-construction notification must include documentation, such as a recent topographic survey or photographs, to justify the extent of the proposed restoration. (Authority: Sections 10 and 404)

Note: The uplands themselves that are lost as a result of a storm, flood, or other discrete event can be replaced without a section 404 permit, if the uplands are restored to the ordinary high water mark (in non-tidal waters) or high tide line (in tidal waters). (See also 33 CFR 328.5.) This NWP authorizes discharges of dredged or fill material into waters of the United States associated with the restoration of uplands

46. Discharges in Ditches. Discharges of dredged or fill material into non-tidal ditches that are: (1) Constructed in uplands, (2) receive water from an area determined to be a water of the United States prior to the construction of the ditch, (3) divert water to an area determined to be a water of the United States prior to the construction of the ditch, and (4) determined to be waters of the United States. The discharge must not cause the loss of greater than one acre of waters of the United States.

This NWP does not authorize discharges of dredged or fill material into ditches constructed in streams or other waters of the United States, or in streams that have been relocated in uplands. This NWP does not authorize discharges of dredged or fill material that increase the capacity of the ditch and drain those areas determined to be waters of the United States prior to construction of the ditch.

Notification: The permittee must submit a pre-construction notification to the district engineer prior to commencing the activity. (See general condition 32.) (Authority: Section 404)

NOTE: THE IEPA HAS CONDITIONED SECTION 401 WATER QUALITY CERTIFICATION APPLICABLE TO NATIONWIDE PERMIT 46. DEPARTMENT OF THE ARMY AUTHORIZATION PURSUANT TO SECTION 404 OF THE CLEAN WATER ACT (33 U.S.C. 1344) UNDER NATIONWIDE PERMIT 46 WILL BE SUBJECT TO THE THREE GENERAL IEPA CONDITIONS, THESE NATIONWIDE SPECIFIC CONDITIONS, AND THE CONDITIONS PUBLISHED IN SECTION C.

1. The applicant shall not cause:
   A. violation of applicable provisions of the Illinois Environmental Protection Act;
   B. water pollution defined and prohibited by the Illinois Environmental Protection Act;
   C. violation of applicable water quality standards of the Illinois Pollution Control Board, Title 35, Subtitle C: Water Pollution Rules and Regulation; or
   D. interference with water use practices near public recreation areas or water supply intakes.
2. The applicant for Nationwide Permit shall provide adequate planning and supervision during the project construction period for implementing construction methods, processes and cleanup procedures necessary to prevent water pollution and control erosion.
3. Any spoil material excavated, dredged or otherwise produced must not be returned to the waterway but must be deposited in a self-contained area in compliance with all state statutes, regulations and permit requirements with no discharge to waters of the State unless a permit has been issued by the Illinois EPA. Any backfilling must be done with clean material and placed in a manner to prevent violation of applicable water quality standards.
4. All areas affected by construction shall be mulched and seeded as soon after construction as possible. The applicant shall undertake necessary measures and procedures to reduce erosion during construction. Interim measures to prevent erosion during construction shall be taken and may include the installation of sedimentation basins and temporary mulching. All construction within the waterway shall be conducted during zero or low flow conditions. The applicant shall be responsible for obtaining an NPDES Storm Water Permit prior to initiating construction if the construction activity associated with the project will result in the disturbance of 1 (one) or more acres, total land area. An NPDES Storm Water Permit may be obtained by submitting a properly completed Notice of Intent (NOI) form by certified mail to the Agency's Division of Water Pollution Control, Permit Section.
5. The applicant for Nationwide Permit 46 shall implement erosion control measures consistent with the "Illinois Urban Manual" (IEPA/USDA, NRCS; 2016).
6. The applicant is advised that the following permit(s) must be obtained from the Agency: permits to construct sanitary sewers, water mains and related facilities prior to construction.
7. The proposed work shall be constructed with adequate erosion control measures (i.e., silt fences, etc.) to prevent transport of sediment and materials to the adjoining wetlands and/or streams.
8. The applicant shall not sever the connection between upstream and downstream surface waters of the State by the discharge of dredged or fill material into ditches.

47. [Reserved]

***** 48. Commercial Shellfish Aquaculture Activities.** Discharges of dredged or fill material into waters of the United States or structures or work in navigable waters of the United States necessary for new and continuing commercial shellfish aquaculture operations in authorized project areas. For the purposes of this NWP, the project area is the area in which the operator is authorized to conduct commercial shellfish aquaculture activities, as identified through a lease or permit issued by an appropriate state or local government agency, a treaty, or any easement, lease, deed, contract, or other legally binding agreement that establishes an enforceable property interest for the operator. A ''new commercial shellfish aquaculture operation'' is an operation in a project area where commercial shellfish aquaculture activities have not been conducted during the past 100 years.

This NWP authorizes the installation of buoys, floats, racks, trays, nets, lines, tubes, containers, and other structures into navigable waters of the United States. This NWP also authorizes discharges of dredged or fill material into waters of the United States necessary for shellfish seeding, rearing, cultivating, transplanting, and harvesting activities. Rafts and other floating structures must be securely anchored and clearly marked.

This NWP does not authorize:

(a) The cultivation of a nonindigenous species unless that species has been previously cultivated in the waterbody;

(b) The cultivation of an aquatic nuisance species as defined in the Nonindigenous Aquatic Nuisance Prevention and Control Act of 1990;

(c) Attendant features such as docks, piers, boat ramps, stockpiles, or staging areas, or the deposition of shell material back into waters of the United States as waste; or

(d) Activities that directly affect more than 1/2-acre of submerged aquatic vegetation beds in project areas that have not been used for commercial shellfish aquaculture activities during the past 100 years.

Notification: The permittee must submit a pre-construction notification to the district engineer if: (1) The activity will include a species that has never been cultivated in the waterbody; or (2) the activity occurs in a project area that has not been used for commercial shellfish aquaculture activities during the past 100 years. If the operator will be conducting commercial shellfish aquaculture activities in multiple contiguous project areas, he or she can either submit one PCN for those contiguous project areas or submit a separate PCN for each project area. (See general condition 32.)

In addition to the information required by paragraph (b) of general condition 32, the pre-construction notification must also include the following information: (1) A map showing the boundaries of the project area(s), with latitude and longitude coordinates for each corner of each project area; (2) the name(s) of the species that will be cultivated during the period this NWP is in effect; (3) whether canopy predator nets will be used; (4) whether suspended cultivation techniques will be used; and (5) general water depths in the project area(s) (a detailed survey is not required). No more than one pre-construction notification per project area or group of contiguous project areas should be submitted for the commercial shellfish operation during the effective period of this NWP. The pre-construction notification should describe all species and culture activities the operator expects to undertake in the project area or group of contiguous project areas during the effective period of this NWP. If an operator intends to undertake unanticipated changes to the commercial shellfish aquaculture operation during the effective period of this NWP, and those changes require Department of the Army authorization, the operator must contact the district engineer to request a modification of the NWP verification; a new Pre-construction notification does not need to be submitted (Authorities: Sections 10 and 404)

Note 1: The permittee should notify the applicable U.S. Coast Guard office regarding the project.

Note 2: To prevent introduction of aquatic nuisance species, no material that has been taken from a different waterbody may be reused in the current project area, unless it has been treated in accordance with the applicable regional aquatic nuisance species management plan.

Note 3: The Nonindigenous Aquatic Nuisance Prevention and Control Act of 1990 defines ''aquatic nuisance species'' as ''a nonindigenous species that threatens the diversity or abundance of native species or the ecological stability of infested waters, or commercial, agricultural, aquacultural, or recreational activities dependent on such waters.''

*** **49. Coal Remining Activities.** Activities. Discharges of dredged or fill material into non-tidal waters of the United States associated with the remining and reclamation of lands that were previously mined for coal. The activities must already be authorized, or they must currently be in process as part of an integrated permit processing procedure, by the Department of the Interior Office of Surface Mining Reclamation and Enforcement, or by states with approved programs under Title IV or Title V of the Surface Mining Control and Reclamation Act of 1977 (SMCRA). Areas previously mined include reclaimed mine sites, abandoned mine land areas, or lands under bond forfeiture contracts.

As part of the project, the permittee may conduct new coal mining activities in conjunction with the remining activities when he or she clearly demonstrates to the district engineer that the overall mining plan will result in a net increase in aquatic resource functions. The Corps will consider the SMCRA agency's decision regarding the amount of currently undisturbed adjacent lands needed to facilitate the remining and reclamation of the previously mined area. The total area disturbed by new mining must not exceed 40 percent of the total acreage covered by both the remined area and the additional area necessary to carry out the reclamation of the previously mined area.

The permittee must submit a pre-construction notification and a document describing how the overall mining plan will result in a net increase in aquatic resource functions to the district engineer and receive written authorization prior to commencing the activity. (See general condition 32.) (Authorities: Sections 10 and 404)

*** **50. Underground Coal Mining Activities.** Discharges of dredged or fill material into non-tidal waters of the United States associated with underground coal mining and reclamation operations provided the activities are authorized, or are currently being processed as part of an integrated permit processing procedure, by the Department of the Interior, Office of Surface Mining Reclamation and Enforcement, or by states with approved programs under Title V of the Surface Mining Control and Reclamation Act of 1977.

The discharge must not cause the loss of greater than 1/2-acre of non-tidal waters of the United States. The discharge must not cause the loss of more than 300 linear feet of stream bed, unless for intermittent and ephemeral stream beds the district engineer waives the 300 linear foot limit by making a written determination concluding that the discharge will result in no more than minimal adverse environmental effects. The loss of stream bed plus any other losses of jurisdictional wetlands and waters caused by the NWP activity cannot exceed 1/2-acre. This NWP does not authorize discharges into non-tidal wetlands adjacent to tidal waters. This NWP does not authorize coal preparation and processing activities outside of the mine site.

Notification: The permittee must submit a pre-construction notification to the district engineer and receive written authorization prior to commencing the activity. (See general condition 32.) If reclamation is required by other statutes, then a copy of the reclamation plan must be submitted with the pre-construction notification. (Authorities: Sections 10 and 404)

Note: Coal preparation and processing activities outside of the mine site may be authorized by NWP 21.

51. Land-Based Renewable Energy Generation Facilities. Discharges of dredged or fill material into non-tidal waters of the United States for the construction, expansion, or modification of land-based renewable energy production facilities, including attendant features. Such facilities include infrastructure to collect solar (concentrating solar power and photovoltaic), wind,

biomass, or geothermal energy. Attendant features may include, but are not limited to roads, parking lots, and stormwater management facilities within the land- based renewable energy generation facility.

The discharge must not cause the loss of greater than 1/2-acre of non-tidal waters of the United States. The discharge must not cause the loss of more than 300 linear feet of stream bed, unless for intermittent and ephemeral stream beds the district engineer waives the 300 linear foot limit by making a written determination concluding that the discharge will result in no more than minimal adverse environmental effects. The loss of stream bed plus any other losses of jurisdictional wetlands and waters caused by the NWP activity cannot exceed 1/2-acre. This NWP does not authorize discharges into non-tidal wetlands adjacent to tidal waters.

Notification: The permittee must submit a pre-construction notification to the district engineer prior to commencing the activity if the discharge results in the loss of greater than 1/10-acre of waters of the United States. (See general condition 32.) (Authorities: Sections 10 and 404)

Note 1: Utility lines constructed to transfer the energy from the land-based renewable energy generation facility to a distribution system, regional grid, or other facility are generally considered to be linear projects and each separate and distant crossing of a waterbody is eligible for treatment as a separate single and complete linear project. Those utility lines may be authorized by NWP 12 or another Department of the Army authorization.

Note 2: If the only activities associated with the construction, expansion, or modification of a land-based renewable energy generation facility that require Department of the Army authorization are discharges of dredged or fill material into waters of the United States to construct, maintain, repair, and/or remove utility lines and/or road crossings, then NWP 12 and/or NWP 14 shall be used if those activities meet the terms and conditions of NWPs 12 and 14, including any applicable regional conditions and any case-specific conditions imposed by the district engineer.

Note 3: For any activity that involves the construction of a wind energy generating structure, solar tower, or overhead transmission line, a copy of the PCN and NWP verification will be provided to the Department of Defense Siting Clearinghouse, which will evaluate potential effects on military activities.

NOTE: THE IEPA HAS CONDITIONED SECTION 401 WATER QUALITY CERTIFICATION APPLICABLE TO NATIONWIDE PERMIT 51. DEPARTMENT OF THE ARMY AUTHORIZATION PURSUANT TO SECTION 404 OF THE CLEAN WATER ACT (33 U.S.C. 1344) UNDER NATIONWIDE PERMIT 51 WILL BE SUBJECT TO THE THREE GENERAL IEPA CONDITIONS, THESE NATIONWIDE SPECIFIC CONDITIONS, AND THE CONDITIONS PUBLISHED IN SECTION C.

1. The applicant shall not cause:
   A. violation of applicable provisions of the Illinois Environmental Protection Act;
   B. water pollution defined and prohibited by the Illinois Environmental Protection Act;
   C. violation of applicable water quality standards of the Illinois Pollution Control Board, Title 35, Subtitle C: Water Pollution Rules and Regulation; or
   D. interference with water use practices near public recreation areas or water supply intakes.
2. The applicant for Nationwide Permit 51 shall implement erosion control measures consistent with the "Illinois Urban Manual" (IEPA/USDA, NRCS; 2016).
3. Any spoil material excavated, dredged or otherwise produced must not be returned to the waterway but must be deposited in a self-contained area in compliance with all state statutes, regulations and permit requirements with no discharge to waters of the State unless a permit has been issued by this Agency. Any backfilling must be done with clean material and placed in a manner to prevent violation of applicable water quality standards.
4. All areas affected by construction shall be mulched and seeded as soon after construction as possible. The applicant shall undertake necessary measures and procedures to reduce erosion during construction. Interim measures to prevent erosion during construction shall be taken and may include the installation of sedimentation basins and temporary mulching. All construction within the waterway shall be conducted during zero or low flow conditions. The applicant shall be responsible for obtaining an NPDES Storm Water Permit prior to initiating construction if the construction activity associated with the project will result in the disturbance of 1 (one) or more acres, total land area. An NPDES Storm Water Permit may be obtained by submitting a properly completed Notice of Intent (NOI) form by certified mail to the Agency's Division of Water Pollution Control, Permit Section.
5. An individual Section 401 water quality certification will be required for any project where the District Engineer waives the stream length limitation of NWP 51.

52. Water-Based Renewable Energy Generation Pilot Projects. Structures and work in navigable waters of the United States and discharges of dredged or fill material into waters of the United States for the construction, expansion, modification, or removal of water-based wind, water-based solar, wave energy, or hydrokinetic renewable energy generation pilot projects and their attendant features. Attendant features may include, but are not limited to, land-based collection and distribution facilities, control facilities, roads, parking lots, and stormwater management facilities.

For the purposes of this NWP, the term ''pilot project'' means an experimental project where the water- based renewable energy generation units will be monitored to collect information on their performance and environmental effects at the project site.

The discharge must not cause the loss of greater than 1/2-acre of waters of the United States, including the loss of more than 300 linear feet of stream bed, unless for intermittent and ephemeral stream beds the district engineer waives the 300 linear foot limit by making a written determination concluding that the discharge will result in no more than minimal adverse environmental effects. The loss of stream bed plus any other losses of jurisdictional wetlands and waters caused by the NWP activity cannot exceed 1/2-acre.

The placement of a transmission line on the bed of a navigable water of the United States from the renewable energy generation unit(s) to a land-based collection and distribution facility is considered a structure under Section 10 of the Rivers and Harbors Act of 1899 (see 33 CFR

322.2(b)), and the placement of the transmission line on the bed of a navigable water of the United States is not a loss of waters of the United States for the purposes of applying the 1/2-acre or 300 linear foot limits.

For each single and complete project, no more than 10 generation units (e.g., wind turbines, wave energy devices, or hydrokinetic devices) are authorized. For floating solar panels in navigable waters of the United States, each single and complete project cannot exceed 1/2- acre in water surface area covered by the floating solar panels.

This NWP does not authorize activities in coral reefs. Structures in an anchorage area established by the U.S. Coast Guard must comply with the requirements in 33 CFR 322.5(l)(2). Structures may not be placed in established danger zones or restricted areas designated in 33 CFR part 334, Federal navigation channels, shipping safety fairways or traffic separation schemes established by the U.S. Coast Guard (see 33 CFR 322.5(l)(1)), or EPA or Corps designated open water dredged material disposal areas.

Upon completion of the pilot project, the generation units, transmission lines, and other structures or fills associated with the pilot project must be removed to the maximum extent practicable unless they are authorized by a separate Department of the Army authorization, such as another NWP, an individual permit, or a regional general permit. Completion of the pilot project will be identified as the date of expiration of the Federal Energy Regulatory Commission (FERC) license, or the expiration date of the NWP authorization if no FERC license is required.

Notification: The permittee must submit a pre-construction notification to the district engineer prior to commencing the activity. (See general condition 32.)
(Authorities: Sections 10 and 404)

Note 1: Utility lines constructed to transfer the energy from the land-based collection facility to a distribution system, regional grid, or other facility are generally considered to be linear projects and each separate and distant crossing of a waterbody is eligible for treatment as a separate single and complete linear project. Those utility lines may be authorized by NWP 12 or another Department of the Army authorization.

Note 2: An activity that is located on an existing locally or federally maintained U.S. Army Corps of Engineers project requires separate approval from the Chief of Engineers or District Engineer under 33 U.S.C. 408.

Note 3: If the pilot project generation units, including any transmission lines, are placed in navigable waters of the United States (i.e., Section 10 waters) within the coastal United States, the Great Lakes, and United States territories, copies of the NWP verification will be sent by the Corps to the National Oceanic and Atmospheric Administration, National Ocean Service, for charting the generation units and associated transmission line(s) to protect navigation.

Note 4: Hydrokinetic renewable energy generation projects that require authorization by the Federal Energy Regulatory Commission under the Federal Power Act of 1920 do not require separate authorization from the Corps under Section 10 of the Rivers and Harbors Act of 1899.

Note 5: For any activity that involves the construction of a wind energy generating structure, solar tower, or overhead transmission line, a copy of the PCN and NWP verification will be provided to the Department of Defense Siting Clearinghouse, which will evaluate potential effects on military activities.

NOTE: THE IEPA HAS CONDITIONED SECTION 401 WATER QUALITY CERTIFICATION APPLICABLE TO NATIONWIDE PERMIT 52. DEPARTMENT OF THE ARMY AUTHORIZATION PURSUANT TO SECTION 404 OF THE CLEAN WATER ACT (33 U.S.C. 1344) UNDER NATIONWIDE PERMIT 52 WILL BE SUBJECT TO THE THREE GENERAL IEPA CONDITIONS, THESE NATIONWIDE SPECIFIC CONDITIONS, AND THE CONDITIONS PUBLISHED IN SECTION C.

1. The applicant shall not cause:
   A. violation of applicable provisions of the Illinois Environmental Protection Act;
   B. water pollution defined and prohibited by the Illinois Environmental Protection Act;
   C. violation of applicable water quality standards of the Illinois Pollution Control Board, Title 35, Subtitle C: Water Pollution Rules and Regulation; or
   D. interference with water use practices near public recreation areas or water supply intakes.
2. The applicant for Nationwide Permit 52 shall implement erosion control measures consistent with the "Illinois Urban Manual" (IEPA/USDA, NRCS; 2016).
3. Any spoil material excavated, dredged or otherwise produced must not be returned to the waterway but must be deposited in a self-contained area in compliance with all state statutes, regulations and permit requirements with no discharge to waters of the State unless a permit has been issued by this Agency. Any backfilling must be done with clean material and placed in a manner to prevent violation of applicable water quality standards.
4. All areas affected by construction shall be mulched and seeded as soon after construction as possible. The applicant shall undertake necessary measures and procedures to reduce erosion during construction. Interim measures to prevent erosion during construction shall be taken and may include the installation of sedimentation basins and temporary mulching. All construction within the waterway shall be conducted during zero or low flow conditions. The applicant shall be responsible for obtaining an NPDES Storm Water Permit prior to initiating construction if the construction activity associated with the project will result in the disturbance of 1 (one) or more acres, total land area. An NPDES Storm Water Permit may be obtained by submitting a properly completed Notice of Intent (NOI) form by certified mail to the Agency's Division of Water Pollution Control, Permit Section.
5. An individual Section 401 water quality certification will be required for any project where the District Engineer waives the stream length limitation of NWP 52.
6. An individual Section 401 water quality certification will be required for any hydrokinetic project that is not previously approved by a Section 401 water quality certification issued by the Illinois EPA for a Federal Energy Regulatory Commission license or permit.

53. Removal of Low-Head Dams. Structures and work in navigable waters of the United States and discharges of dredged or fill material into waters of the United States associated with the removal of low-head dams.

For the purposes of this NWP, the term ''low-head dam'' is defined as a dam built across a stream to pass flows from upstream over all, or nearly all, of the width of the dam crest on a

continual and uncontrolled basis. (During a drought, there might not be water flowing over the dam crest.) In general, a low-head dam does not have a separate spillway or spillway gates but it may have an uncontrolled spillway. The dam crest is the top of the dam from left abutment to right abutment, and if present, an uncontrolled spillway. A low-head dam provides little storage function.

The removed low-head dam structure must be deposited and retained in an area that has no waters of the United States unless otherwise specifically approved by the district engineer under separate authorization.

Because the removal of the low-head dam will result in a net increase in ecological functions and services provided by the stream, as a general rule compensatory mitigation is not required for activities authorized by this NWP. However, the district engineer may determine for a particular low-head dam removal activity that compensatory mitigation is necessary to ensure the authorized activity results in no more than minimal adverse environmental effects.

Notification: The permittee must submit a pre-construction notification to the district engineer prior to commencing the activity. (See general condition 32.)
(Authorities: Sections 10 and 404)

Note: This NWP does not authorize discharges of dredged or fill material into waters of the United States or structures or work in navigable waters to restore the stream in the vicinity of the low-head dam, including the former impoundment area. Nationwide permit 27 or other Department of the Army permits may authorize such activities. This NWP does not authorize discharges of dredged or fill material into waters of the United States or structures or work in navigable waters to stabilize stream banks. Bank stabilization activities may be authorized by NWP 13 or other Department of the Army permits.

NOTE: THE IEPA HAS CONDITIONED SECTION 401 WATER QUALITY CERTIFICATION APPLICABLE TO NATIONWIDE PERMIT 53. DEPARTMENT OF THE ARMY AUTHORIZATION PURSUANT TO SECTION 404 OF THE CLEAN WATER ACT (33 U.S.C. 1344) UNDER NATIONWIDE PERMIT 53 WILL BE SUBJECT TO THE THREE GENERAL IEPA CONDITIONS, THESE NATIONWIDE SPECIFIC CONDITIONS, AND THE CONDITIONS PUBLISHED IN SECTION C.

1. The applicant shall implement the following Best Management Practices and Material Testing:
   A. Sediments and river bottom material are excavated and removed to upland areas to minimize sediment transport downstream, minimize downcutting and protect water quality; or
   B. measures shall be implemented to minimize sediment transport downstream; or
   C. the sediments and river bottom materials that will be transported downstream are determined to have less than 20 percent passing a #230 U.S. Sieve based on representative sampling and analysis of the sediments and river bottom materials; or
   D. a combination of the above practices to protect water quality; and sediments and river bottom materials shall not be pollutional if released to downstream waters.
2. Best Management Practices shall be implemented to minimize sediment transport downstream, minimize downcutting of sediment and river bottom materials and protect water quality.
3. The project shall be required to obtain individual 401 water quality certification if a public or food processing surface water intake is located within the upstream pool of the dam to be removed.
4. The applicant shall notify downstream surface water supplies of the proposed dam removal. The applicant shall implement practices to prevent interference with Public and Food Processing Water Supply intakes. The Illinois EPA’s Division of Public Water Supply may be contacted at 217/782-1020 for information on the Public and Food Processing Water Supplies.
5. The applicant for Nationwide Permit 53 shall not cause:
   A. violation of applicable provisions of the Illinois Environmental Protection Act;
   B. water pollution defined and prohibited by the Illinois Environmental Protection Act;
   C. violation of applicable water quality standards of the Illinois Pollution Control Board, Title 35, Subtitle C: Water Pollution Rules and Regulation; or
   D. interference with water use practices near public recreation areas or water supply intakes.
6. The applicant for Nationwide Permit 53 shall implement erosion control measures consistent with the "Illinois Urban Manual" (IEPA/USDA, NRCS; 2016).
7. Any spoil material excavated, dredged or otherwise produced must not be returned to the waterway but must be deposited in a self-contained area in compliance with all state statutes, regulations and permit requirements with no discharge to waters of the State unless a permit has been issued by this Agency. Any backfilling must be done with clean material and placed in a manner to prevent violation of applicable water quality standards.
8. All areas affected by construction shall be stabilized or mulched and seeded as soon after construction as possible. The applicant shall undertake necessary measures and procedures to reduce erosionduring construction. Interim measures to prevent erosion during construction shall be taken and may include the installation of sedimentation basins and temporary mulching. All construction within the waterway shall be conducted during zero or low flow conditions. The applicant shall be responsible for obtaining an NPDES Storm Water Permit prior to initiating construction if the construction activity associated with the project will result in the disturbance of 1 (one) or more acres, total land area. An NPDES Storm Water Permit may be obtained by submitting a properly completed Notice of Intent (NOI) form by certified mail to the Agency's Division of Water Pollution Control, Permit Section.

54. Living Shorelines. Structures and work in navigable waters of the United States and discharges of dredged or fill material into waters of the United States for the construction and maintenance of living shorelines to stabilize banks and shores in coastal waters, which includes the Great Lakes, along shores with small fetch and gentle slopes that are subject to low- to mid-energy waves. A living shoreline has a footprint that is made up mostly of native material. It incorporates vegetation or other living, natural ‘‘soft’’ elements alone or in combination with some type of harder shoreline structure (e.g., oyster or mussel reefs or rock

sills) for added protection and stability. Living shorelines should maintain the natural continuity of the land-water interface, and retain or enhance shoreline ecological processes. Living shorelines must have a substantial biological component, either tidal or lacustrine fringe wetlands or oyster or mussel reef structures. The following conditions must be met:

(a) The structures and fill area, including sand fills, sills, breakwaters, or reefs, cannot extend into the waterbody more than 30 feet from the mean low water line in tidal waters or the ordinary high water mark in the Great Lakes, unless the district engineer waives this criterion by making a written determination concluding that the activity will result in no more than minimal adverse environmental effects;

(b) The activity is no more than 500 feet in length along the bank, unless the district engineer waives this criterion by making a written determination concluding that the activity will result in no more than minimal adverse environmental effects;

(c) Coir logs, coir mats, stone, native oyster shell, native wood debris, and other structural materials must be adequately anchored, of sufficient weight, or installed in a manner that prevents relocation in most wave action or water flow conditions, except for extremely severe storms;

(d) For living shorelines consisting of tidal or lacustrine fringe wetlands, native plants appropriate for current site conditions, including salinity, must be used if the site is planted by the permittee;

(e) Discharges of dredged or fill material into waters of the United States, and oyster or mussel reef structures in navigable waters, must be the minimum necessary for the establishment and maintenance of the living shoreline;

(f) If sills, breakwaters, or other structures must be constructed to protect fringe wetlands for the living shoreline, those structures must be the minimum size necessary to protect those fringe wetlands;

(g) The activity must be designed, constructed, and maintained so that it has no more than minimal adverse effects on water movement between the waterbody and the shore and the movement of aquatic organisms between the waterbody and the shore; and

(h) The living shoreline must be properly maintained, which may require periodic repair of sills, breakwaters, or reefs, or replacing sand fills after severe storms or erosion events. Vegetation may be replanted to maintain the living shoreline. This NWP authorizes those maintenance and repair activities, including any minor deviations necessary to address changing environmental conditions.

This NWP does not authorize beach nourishment or land reclamation activities. Notification: The permittee must submit a pre-construction notification to the district engineer prior to commencing the construction of the living shoreline. (See general condition 32.) The pre-construction notification must include a delineation of special aquatic sites (see paragraph (b)(4) of general condition 32). Pre-construction notification is not required for maintenance and repair activities for living shorelines unless required by applicable NWP general conditions or regional conditions. (Authorities: Sections 10 and 404)

Note: In waters outside of coastal waters, nature-based bank stabilization techniques, such as bioengineering and vegetative stabilization, may be authorized by NWP 13.

NOTE: THE IEPA HAS CONDITIONED SECTION 401 WATER QUALITY CERTIFICATION APPLICABLE TO NATIONWIDE PERMIT 54. DEPARTMENT OF THE ARMY AUTHORIZATION PURSUANT TO SECTION 404 OF THE CLEAN WATER ACT (33 U.S.C. 1344) UNDER NATIONWIDE PERMIT 54 WILL BE SUBJECT TO THE THREE GENERAL IEPA CONDITIONS, THESE NATIONWIDE SPECIFIC CONDITIONS, AND THE CONDITIONS PUBLISHED IN SECTION C.

1. An individual Section 401 water quality certification shall be required for any project that exceeds 1000 feet as measured along the bank and or when the District Engineer waives the limitation of 30 feet as measured from the mean high water line.
2. The applicant shall not cause:
   A. violation of applicable provisions of the Illinois Environmental Protection Act;
   B. water pollution defined and prohibited by the Illinois Environmental Protection Act;
   C. violation of applicable water quality standards of the Illinois Pollution Control Board, Title 35, Subtitle C: Water Pollution Rules and Regulation; or
   D. interference with water use practices near public recreation areas or water supply intakes.
3. The applicant for Nationwide Permit 54 shall implement erosion control measures consistent with the "Illinois Urban Manual" (IEPA/USDA, NRCS; 2016).
4. Any spoil material excavated, dredged or otherwise produced must not be returned to the waterway but must be deposited in a self-contained area in compliance with all state statutes, regulations and permit requirements with no discharge to waters of the State unless a permit has been issued by this Agency. Any backfilling must be done with clean material and placed in a manner to prevent violation of applicable water quality standards.
5. All areas affected by construction shall be stabilized or mulched and seeded as soon after construction as possible. The applicant shall undertake necessary measures and procedures to reduce erosion during construction. Interim measures to prevent erosion during construction shall be taken and may include the installation of sedimentation basins and temporary mulching. All construction within the waterway shall be conducted during zero or low flow conditions. The applicant shall be responsible for obtaining an NPDES Storm Water Permit prior to initiating construction if the construction activity associated with the project will result in the disturbance of 1 (one) or more acres, total land area. An NPDES Storm Water Permit may be obtained by submitting a properly completed Notice of Intent (NOI) form by certified mail to the Agency's Division of Water Pollution Control, Permit Section.

C. Nationwide Permit General Conditions

To qualify for NWP authorization, the prospective permittee must comply with the following general conditions, as applicable, in addition to any regional or case-specific conditions imposed by the division engineer or district engineer. Prospective permittees should contact the appropriate Corps district office to determine if regional conditions have been imposed on an NWP. Prospective permittees should also contact the appropriate Corps district office to determine the status of Clean Water Act Section 401 water quality certification and/or Coastal Zone Management Act consistency for an NWP. Every person who may wish to obtain permit authorization under one or more NWPs, or who is currently relying on an existing or prior permit authorization under one or more NWPs, has been and is on notice that all of the provisions of 33 CFR 330.1 through 330.6 apply to every NWP authorization. Note especially 33 CFR 330.5 relating to the modification, suspension, or revocation of any NWP authorization.

1. Navigation. (a) No activity may cause more than a minimal adverse effect on navigation.
   (b) Any safety lights and signals prescribed by the U.S. Coast Guard, through regulations or otherwise, must be installed and maintained at the permittee's expense on authorized facilities in navigable waters of the United States.
   (c) The permittee understands and agrees that, if future operations by the United States require the removal, relocation, or other alteration, of the structure or work herein authorized, or if, in the opinion of the Secretary of the Army or his authorized representative, said structure or work shall cause unreasonable obstruction to the free navigation of the navigable waters, the permittee will be required, upon due notice from the Corps of Engineers, to remove, relocate, or alter the structural work or obstructions caused thereby, without expense to the United States. No claim shall be made against the United States on account of any such removal or alteration.
2. Aquatic Life Movements. No activity may substantially disrupt the necessary life cycle movements of those species of aquatic life indigenous to the waterbody, including those species that normally migrate through the area, unless the activity's primary purpose is to impound water. All permanent and temporary crossings of waterbodies shall be suitably culverted, bridged, or otherwise designed and constructed to maintain low flows to sustain the movement of those aquatic species. If a bottomless culvert cannot be used, then the crossing should be designed and constructed to minimize adverse effects to aquatic life movements.
3. Spawning Areas. Activities in spawning areas during spawning seasons must be avoided to the maximum extent practicable. Activities that result in the physical destruction (e.g., through excavation, fill, or downstream smothering by substantial turbidity) of an important spawning area are not authorized.
4. Migratory Bird Breeding Areas. Activities in waters of the United States that serve as breeding areas for migratory birds must be avoided to the maximum extent practicable.
5. Shellfish Beds. No activity may occur in areas of concentrated shellfish populations, unless the activity is directly related to a shellfish harvesting activity authorized by NWPs 4 and 48, or is a shellfish seeding or habitat restoration activity authorized by NWP 27.
6. Suitable Material. No activity may use unsuitable material (e.g., trash, debris, car bodies, asphalt, etc.). Material used for construction or discharged must be free from toxic pollutants in toxic amounts (see section 307 of the Clean Water Act).
7. Water Supply Intakes. No activitymay occur in the proximity of a public water supply intake, except where the activity is for the repair or improvement of public water supply intake structures or adjacent bank stabilization.
8. Adverse Effects From Impoundments. If the activity creates an impoundment of water, adverse effects to the aquatic system due to accelerating the passage of water, and/or restricting its flow must be minimized to the maximum extent practicable.
9. Management of Water Flows. To the maximum extent practicable, the pre-construction course, condition, capacity, and location of open waters must be maintained for each activity, including stream channelization, storm water management activities, and temporary and permanent road crossings, except as provided below. The activity must be constructed to withstand expected high flows. The activity must not restrict or impede the passage of normal or high flows, unless the primary purpose of the activity is to impound water or manage high flows. The activity may alter the pre-construction course, condition, capacity, and location of open waters if it benefits the aquatic environment (e.g., stream restoration or relocation activities).
10. Fills Within 100-Year Floodplains. The activity must comply with applicable FEMA-approved state or local floodplain management requirements.
11. Equipment. Heavy equipment working in wetlands or mudflats must be placed on mats, or other measures must be taken to minimize soil disturbance.
12. Soil Erosion and Sediment Controls. Appropriate soil erosion and sediment controls must be used and maintained in effective operating condition during construction, and all exposed soil and other fills, as well as any work below the ordinary high water mark or high tide line, must be permanently stabilized at the earliest practicable date. Permittees are encouraged to perform work within waters of the United States during periods of low-flow or no-flow, or during low tides.
13. Removal of Temporary Fills. Temporary fills must be removed in their entirety and the affected areas returned to pre-construction elevations. The affected areas must be revegetated, as appropriate.
14. Proper Maintenance. Any authorized structure or fill shall be properly maintained, including maintenance to ensure public safety and compliance with applicable NWP general conditions, as well as any activity-specific conditions added by the district engineer to an NWP authorization.
15. Single and Complete Project. The activity must be a single and complete project. The same NWP cannot be used more than once for the same single and complete project.
16. Wild and Scenic Rivers. (a) No NWP activity may occur in a component of the National Wild and Scenic River System, or in a river officially designated by Congress as a ''study river'' for possible inclusion in the system while the river is in an official study status, unless the appropriate Federal agency with direct management responsibility for such river,

has determined in writing that the proposed activity will not adversely affect the Wild and Scenic River designation or study status.

(b) If a proposed NWP activity will occur in a component of the National Wild and Scenic River System, or in a river officially designated by Congress as a ''study river'' for possible inclusion in the system while the river is in an official study status, the permittee must submit a pre-construction notification (see general condition 32). The district engineer will coordinate the PCN with the Federal agency with direct management responsibility for that river. The permittee shall not begin the NWP activity until notified by the district engineer that the Federal agency with direct management responsibility for that river has determined in writing that the proposed NWP activity will not adversely affect the Wild and Scenic River designation or study status.

(c) Information on Wild and Scenic Rivers may be obtained from the appropriate Federal land management agency responsible for the designated Wild and Scenic River or study river (e.g., National Park Service, U.S. Forest Service, Bureau of Land Management, U.S. Fish and Wildlife Service). Information on these rivers is also available at: http://www.rivers.gov/.

17. Tribal Rights. No NWP activity may cause more than minimal adverse effects on tribal rights (including treaty rights), protected tribal resources, or tribal lands.

18. Endangered Species. (a) No activity is authorized under any NWP which is likely to directly or indirectly jeopardize the continued existence of a threatened or endangered species or a species proposed for such designation, as identified under the Federal Endangered Species Act (ESA), or which will directly or indirectly destroy or adversely modify the critical habitat of such species. No activity is authorized under any NWP which ''may affect'' a listed species or critical habitat, unless ESA section 7 consultation addressing the effects of the proposed activity has been completed. Direct effects are the immediate effects on listed species and critical habitat caused by the NWP activity. Indirect effects are those effects on listed species and critical habitat that are caused by the NWP activity and are later in time, but still are reasonably certain to occur.

(b) Federal agencies should follow their own procedures for complying with the requirements of the ESA. If pre-construction notification is required for the proposed activity, the Federal permittee must provide the district engineer with the appropriate documentation to demonstrate compliance with those requirements. The district engineer will verify that the appropriate documentation has been submitted. If the appropriate documentation has not been submitted, additional ESA section 7 consultation may be necessary for the activity and the respective federal agency would be responsible for fulfilling its obligation under section 7 of the ESA.

(c) Non-federal permittees must submit a pre-construction notification to the district engineer if any listed species or designated critical habitat might be affected or is in the vicinity of the activity, or if the activity is located in designated critical habitat, and shall not begin work on the activity until notified by the district engineer that the requirements of the ESA have been satisfied and that the activity is authorized. For activities that might affect Federally-listed endangered or threatened species or designated critical habitat, the pre-construction notification must include the name(s) of the endangered or threatened species that might be affected by the proposed activity or that utilize the designated critical habitat that might be affected by the proposed activity. The district engineer will determine whether the proposed activity ''may affect'' or will have ''no effect'' to listed species and designated critical habitat and will notify the non-federal applicant of the Corps' determination within 45 days of receipt of a complete pre-construction notification. In cases where the non-federal applicant has identified listed species or critical habitat that might be affected or is in the vicinity of the activity, and has so notified the Corps, the applicant shall not begin work until the Corps has provided notification that the proposed activity will have ''no effect'' on listed species or critical habitat, or until ESA section 7 consultation has been completed. If the non-federal applicant has not heard back from the Corps within 45 days, the applicant must still wait for notification from the Corps.

(d) As a result of formal or informal consultation with the FWS or NMFS the district engineer may add species-specific permit conditions to the NWPs.

(e) Authorization of an activity by an NWP does not authorize the ''take'' of a threatened or endangered species as defined under the ESA. In the absence of separate authorization (e.g., an ESA Section 10 Permit, a Biological Opinion with ''incidental take'' provisions, etc.) from the FWS or the NMFS, the Endangered Species Act prohibits any person subject to the jurisdiction of the United States to take a listed species, where ''take'' means to harass, harm, pursue, hunt, shoot, wound, kill, trap, capture, or collect, or to attempt to engage in any such conduct. The word ''harm'' in the definition of ''take'' means an act which actually kills or injures wildlife. Such an act may include significant habitat modification or degradation where it actually kills or injures wildlife by significantly impairing essential behavioral patterns, including breeding, feeding or sheltering.

(f) If the non-federal permittee has a valid ESA Section 10(a)(1)(B) incidental take permit with an approved Habitat Conservation Plan for a project or a group of projects that includes the proposed NWP activity, the non-federal applicant should provide a copy of that ESA Section 10(a)(1)(B) permit with the PCN required by paragraph (c) of this general condition. The district engineer will coordinate with the agency that issued the ESA Section 10(a)(1)(B) permit to determine whether the proposed NWP activity and the associated incidental take were considered in the internal ESA section 7 consultation conducted for the ESA Section 10(a)(1)(B) permit. If that coordination results in concurrence from the agency that the proposed NWP activity and the associated incidental take were considered in the internal ESA section 7 consultation for the ESA Section 10(a)(1)(B) permit, the district engineer does not need to conduct a separate ESA section 7 consultation for the proposed NWP activity. The district engineer will notify the non-federal applicant within 45 days of receipt of a complete pre-construction

notification whether the ESA Section 10(a)(1)(B)permit covers the proposed NWP activity or whether additional ESA section 7 consultation is required.

(g) Information on the location of threatened and endangered species and their critical habitat can be obtained directly from the offices of the FWS and NMFS or their world-wide-web pages at http://www.fws.gov/ or http://www.fws.gov/ipac and http://www.nmfs.noaa.gov/pr/species/esa/ respectively.

19. Migratory Birds and Bald and Golden Eagles. The permittee is responsible for ensuring their action complies with the Migratory Bird Treaty Act and the Bald and Golden Eagle Protection Act. The permittee is responsible for contacting appropriate local office of the U.S. Fish and Wildlife Service to determine applicable measures to reduce impacts to migratory birds or eagles, including whether ''incidental take'' permits are necessary and available under the Migratory Bird Treaty Act or Bald and Golden Eagle Protection Act for a particular activity.

20. Historic Properties. (a) In cases where the district engineer determines that the activity may have the potential to cause effects to properties listed, or eligible for listing, in the National Register of Historic Places, the activity is not authorized, until the requirements of Section 106 of the National Historic Preservation Act (NHPA) have been satisfied.

(b) Federal permittees should follow their own procedures for complying with the requirements of Section 106 of the National Historic Preservation Act. If pre-construction notification is required for the proposed NWP activity, the Federal permittee must provide the district engineer with the appropriate documentation to demonstrate compliance with those requirements. The district engineer will verify that the appropriate documentation has been submitted. If the appropriate documentation is not submitted, then additional consultation under Section 106 may be necessary. The respective federal agency is responsible for fulfilling its obligation to comply with Section 106.

(c) Non-federal permittees must submit a pre-construction notification to the district engineer if the NWP activity might have the potential to cause effects to any historic properties listed on, determined to be eligible for listing on, or potentially eligible for listing on the National Register of Historic Places, including previously unidentified properties. For such activities, the pre-construction notification must state which historic properties might have the potential to be affected by the proposed NWP activity or include a vicinity map indicating the location of the historic properties or the potential for the presence of historic properties. Assistance regarding information on the location of, or potential for, the presence of historic properties can be sought from the State Historic Preservation Officer, Tribal Historic Preservation Officer, or designated tribal representative, as appropriate, and the National Register of Historic Places (see 33 CFR 330.4(g)). When reviewing pre-construction notifications, district engineers will comply with the current procedures for addressing the requirements of Section 106 of the National Historic Preservation Act. The district engineer shall make a reasonable and good faith effort to carry out appropriate identification efforts, which may include background research, consultation, oral history interviews, sample field investigation, and field survey. Based on the information submitted in the PCN and these identification efforts, the district engineer shall determine whether the proposed NWP activity has the potential to cause effects on the historic properties. Section 106 consultation is not required when the district engineer determines that the activity does not have the potential to cause effects on historic properties (see 36 CFR 800.3(a)). Section 106 consultation is required when the district engineer determines that the activity has the potential to cause effects on historic properties. The district engineer will conduct consultation with consulting parties identified under 36 CFR 800.2(c) when he or she makes any of the following effect determinations for the purposes of Section 106 of the NHPA: no historic properties affected, no adverse effect, or adverse effect. Where the non-federal applicant has identified historic properties on which the activity might have the potential to cause effects and so notified the Corps, the non-federal applicant shall not begin the activity until notified by the district engineer either that the activity has no potential to cause effects to historic properties or that NHPA Section 106 consultation has been completed.

(d) For non-federal permittees, the district engineer will notify the prospective permittee within 45 days of receipt of a complete pre-construction notification whether NHPA Section 106 consultation is required. If NHPA Section 106 consultation is required, the district engineer will notify the non-federal applicant that he or she cannot begin the activity until Section 106 consultation is completed. If the non-federal applicant has not heard back from the Corps within 45 days, the applicant must still wait for notification from the Corps.

(e) Prospective permittees should be aware that section 110k of the NHPA (54 U.S.C. 306113) prevents the Corps from granting a permit or other assistance to an applicant who, with intent to avoid the requirements of Section 106 of the NHPA, has intentionally significantly adversely affected a historic property to which the permit would relate, or having legal power to prevent it, allowed such significant adverse effect to occur, unless the Corps, after consultation with the Advisory Council on Historic Preservation (ACHP), determines that circumstances justify granting such assistance despite the adverse effect created or permitted by the applicant. If circumstances justify granting the assistance, the Corps is required to notify the ACHP and provide documentation specifying the circumstances, the degree of damage to the integrity of any historic properties affected, and proposed mitigation. This documentation must include any views obtained from the applicant, SHPO/ THPO, appropriate Indian tribes if the undertaking occurs on or affects historic properties on tribal lands or affects properties of interest to those tribes, and other parties known to have a legitimate interest in the impacts to the permitted activity on historic properties.

21. Discovery of Previously Unknown Remains and Artifacts. If you discover any previously unknown historic, cultural or archeological remains and artifacts while accomplishing the

activity authorized by this permit, you must immediately notify the district engineer of what you have found, and to the maximum extent practicable, avoid construction activities that may affect the remains and artifacts until the required coordination has been completed. The district engineer will initiate the Federal, Tribal, and state coordination required to determine if the items or remains warrant a recovery effort or if the site is eligible for listing in the National Register of Historic Places.

22. Designated Critical Resource Waters. Critical resource waters include, NOAA-managed marine sanctuaries and marine monuments, and National Estuarine Research Reserves. The district engineer may designate, after notice and opportunity for public comment, additional waters officially designated by a state as having particular environmental or ecological significance, such as outstanding national resource waters or state natural heritage sites. The district engineer may also designate additional critical resource waters after notice and opportunity for public comment.
    (a) Discharges of dredged or fill material into waters of the United States are not authorized by NWPs 7, 12, 14, 16, 17, 21, 29, 31, 35, 39, 40, 42, 43, 44, 49, 50, 51, and 52 for any activity within, or directly affecting, critical resource waters, including wetlands adjacent to such waters.
    (b) For NWPs 3, 8, 10, 13, 15, 18, 19, 22, 23, 25, 27, 28, 30, 33, 34, 36, 37, 38, and 54, notification is required in accordance with General Condition 32, for any activity proposed in the designated critical resource waters including wetlands adjacent to those waters. The district engineer may authorize activities under these NWPs only after it is determined that the impacts to the critical resource waters will be no more than minimal.

23. Mitigation. The district engineer will consider the following factors when determining appropriate and practicable mitigation necessary to ensure that the individual and cumulative adverse environmental effects are no more than minimal:
    (a) The activity must be designed and constructed to avoid and minimize adverse effects, both temporary and permanent, to waters of the United States to the maximum extent practicable at the project site (i.e., on site).
    (b) Mitigation in all its forms (avoiding, minimizing, rectifying, reducing, or compensating for resource losses) will be required to the extent necessary to ensure that the individual and cumulative adverse environmental effects are no more than minimal.
    (c) Compensatory mitigation at a minimum one-for-one ratio will be required for all wetland losses that exceed 1/10-acre and require Pre-construction notification, unless the district engineer determines in writing that either some other form of mitigation would be more environmentally appropriate or the adverse environmental effects of the proposed activity are no more than minimal, and provides an activity-specific waiver of this requirement. For wetland losses of 1/10-acre or less that require pre-construction notification, the district engineer may determine on a case-by-case basis that compensatory mitigation is required to ensure that the activity results in only minimal adverse environmental effects.
    (d) For losses of streams or other open waters that require pre-construction notification, the district engineer may require compensatory mitigation to ensure that the activity results in no more than minimal adverse environmental effects. Compensatory mitigation for losses of streams should be provided, if practicable, through stream rehabilitation, enhancement, or preservation, since streams are difficult-to-replace resources (see 33 CFR 332.3(e)(3)).
    (e) Compensatory mitigation plans for NWP activities in or near streams or other open waters will normally include a requirement for the restoration or enhancement, maintenance, and legal protection (e.g., conservation easements) of riparian areas next to open waters. In some cases, the restoration or maintenance/protection of riparian areas may be the only compensatory mitigation required. Restored riparian areas should consist of native species. The width of the required riparian area will address documented water quality or aquatic habitat loss concerns. Normally, the riparian area will be 25 to 50 feet wide on each side of the stream, but the district engineer may require slightly wider riparian areas to address documented water quality or habitat loss concerns. If it is not possible to restore or maintain/protect a riparian area on both sides of a stream, or if the waterbody is a lake or coastal waters, then restoring or maintaining/protecting a riparian area along a single bank or shoreline may be sufficient. Where both wetlands and open waters exist on the project site, the district engineer will determine the appropriate compensatory mitigation (e.g., riparian areas and/or wetlands compensation) based on what is best for the aquatic environment on a watershed basis. In cases where riparian areas are determined to be the most appropriate form of minimization or compensatory mitigation, the district engineer may waive or reduce the requirement to provide wetland compensatory mitigation for wetland losses.
    (f) Compensatory mitigation projects provided to offset losses of aquatic resources must comply with the applicable provisions of 33 CFR part 332.
        (1) The prospective permittee is responsible for proposing an appropriate compensatory mitigation option if compensatory mitigation is necessary to ensure that the activity results in no more than minimal adverse environmental effects. For the NWPs, the preferred mechanism for providing compensatory mitigation is mitigation bank credits or in-lieu fee program credits (see 33 CFR 332.3(b)(2) and (3)). However, if an appropriate number and type of mitigation bank or in-lieu credits are not available at the time the PCN is submitted to the district engineer, the district engineer may approve the use of permittee-responsible mitigation.
        (2) The amount of compensatory mitigation required by the district engineer must be sufficient to ensure that the authorized activity results in no more than minimal individual and cumulative adverse environmental effects (see 33 CFR 330.1(e)(3)). (See also 33 CFR 332.3(f)).
        (3) Since the likelihood of success is greater and the impacts to potentially valuable uplands are reduced, aquatic resource restoration should be the first compensatory mitigation option considered for permittee-responsible mitigation.

(4) If permittee-responsible mitigation is the proposed option, the prospective permittee is responsible for submitting a mitigation plan. A conceptual or detailed mitigation plan may be used by the district engineer to make the decision on the NWP verification request, but a final mitigation plan that addresses the applicable requirements of 33 CFR 332.4(c)(2) through (14) must be approved by the district engineer before the permittee begins work in waters of the United States, unless the district engineer determines that prior approval of the final mitigation plan is not practicable or not necessary to ensure timely completion of the required compensatory mitigation (see 33 CFR 332.3(k)(3)).

(5) If mitigation bank or in-lieu fee program credits are the proposed option, the mitigation plan only needs to address the baseline conditions at the impact site and the number of credits to be provided.

(6) Compensatory mitigation requirements (e.g., resource type and amount to be provided as compensatory mitigation, site protection, ecological performance standards, monitoring requirements) may be addressed through conditions added to the NWP authorization, instead of components of a compensatory mitigation plan (see 33 CFR 332.4(c)(1)(ii)).

(g) Compensatory mitigation will not be used to increase the acreage losses allowed by the acreage limits of the NWPs. For example, if an NWP has an acreage limit of 1/2-acre, it cannot be used to authorize any NWP activity resulting in the loss of greater than 1/2-acre of waters of the United States, even if compensatory mitigation is provided that replaces or restores some of the lost waters. However, compensatory mitigation can and should be used, as necessary, to ensure that an NWP activity already meeting the established acreage limits also satisfies the no more than minimal impact requirement for the NWPs.

(h) Permittees may propose the use of mitigation banks, in-lieu fee programs, or permittee-responsible mitigation. When developing a compensatory mitigation proposal, the permittee must consider appropriate and practicable options consistent with the framework at 33 CFR 332.3(b). For activities resulting in the loss of marine or estuarine resources, permittee- responsible mitigation may be environmentally preferable if there are no mitigation banks or in-lieu fee programs in the area that have marine or estuarine credits available for sale or transfer to the permittee. For permittee-responsible mitigation, the special conditions of the NWP verification must clearly indicate the party or parties responsible for the implementation and performance of the compensatory mitigation project, and, if required, its long-term management.

(i) Where certain functions and services of waters of the United States are permanently adversely affected by a regulated activity, such as discharges of dredged or fill material into waters of the United States that will convert a forested or scrub-shrub wetland to a herbaceous wetland in a permanently maintained utility line right-of-way, mitigation may be required to reduce the adverse environmental effects of the activity to the no more than minimal level.

24. Safety of Impoundment Structures. To ensure that all impoundment structures are safely designed, the district engineer may require non-federal applicants to demonstrate that the structures comply with established state dam safety criteria or have been designed by qualified persons. The district engineer may also require documentation that the design has been independently reviewed by similarly qualified persons, and appropriate modifications made to ensure safety.

25. Water Quality. Where States and authorized Tribes, or EPA where applicable, have not previously certified compliance of an NWP with CWA section 401, individual 401 Water Quality Certification must be obtained or waived (see 33 CFR 330.4(c)). The district engineer or State or Tribe may require additional water quality management measures to ensure that the authorized activity does not result in more than minimal degradation of water quality.

26. Coastal Zone Management. In coastal states where an NWP has not previously received a state coastal zone management consistency concurrence, an individual state coastal zone management consistency concurrence must be obtained, or a presumption of concurrence must occur (see 33 CFR 330.4(d)). The district engineer or a State may require additional measures to ensure that the authorized activity is consistent with state coastal zone management requirements.

27. Regional and Case-By-Case Conditions. The activity must comply with any regional conditions that may have been added by the Division Engineer (see 33 CFR 330.4(e)) and with any case specific conditions added by the Corps or by the state, Indian Tribe, or U.S. EPA in its section 401 Water Quality Certification, or by the state in its Coastal Zone Management Act consistency determination.

28. Use of Multiple Nationwide Permits. The use of more than one NWP for a single and complete project is prohibited, except when the acreage loss of waters of the United States authorized by the NWPs does not exceed the acreage limit of the NWP with the highest specified acreage limit. For example, if a road crossing over tidal waters is constructed under NWP 14, with associated bank stabilization authorized by NWP 13, the maximum acreage loss of waters of the United States for the total project cannot exceed 1/3-acre.

29. Transfer of Nationwide Permit Verifications. If the permittee sells the property associated with a nationwide permit verification, the permittee may transfer the nationwide permit verification to the new owner by submitting a letter to the appropriate Corps district office to validate the transfer. A copy of the nationwide permit verification must be attached to the letter, and the letter must contain the following statement and signature: When the structures or work authorized by this nationwide permit are still in existence at the time the property is transferred, the terms and conditions of this nationwide permit, including any special conditions, will continue to be binding on the new owner(s) of the property. To validate the transfer of this nationwide permit and the associated liabilities associated with compliance with its terms and conditions, have the transferee sign and date below.

(Transferee)

(Date)

30. Compliance Certification. Each permittee who receives an NWP verification letter from the Corps must provide a signed certification documenting completion of the authorized activity and implementation of any required compensatory mitigation. The success of any required permittee-responsible mitigation, including the achievement of ecological performance standards, will be addressed separately by the district engineer. The Corps will provide the permittee the certification document with the NWP verification letter. The certification document will include:
    (a) A statement that the authorized activity was done in accordance with the NWP authorization, including any general, regional, or activity-specific conditions;
    (b) A statement that the implementation of any required compensatory mitigation was completed in accordance with the permit conditions. If credits from a mitigation bank or in-lieu fee program are used to satisfy the compensatory mitigation requirements, the certification must include the documentation required by 33 CFR 332.3(l)(3) to confirm that the permittee secured the appropriate number and resource type of credits; and
    (c) The signature of the permittee certifying the completion of the activity and mitigation.The completed certification document must be submitted to the district engineer within 30 days of completion of the authorized activity or the implementation of any required compensatory mitigation, whichever occurs later.
31. Activities Affecting Structures or Works Built by the United States. If an NWP activity also requires permission from the Corps pursuant to 33 U.S.C. 408 because it will alter or temporarily or permanently occupy or use a U.S. Army Corps of Engineers (USACE) federally authorized Civil Works project (a ''USACE project''), the prospective permittee must submit a pre-construction notification. See paragraph (b)(10) of General Condition 32. An activity that requires section 408 permission is not authorized by NWP until the appropriate Corps office issues the section 408 permission to alter, occupy, or use the USACE project, and the district engineer issues a written NWP verification.
32. Pre-Construction Notification. (a) Timing. Where required by the terms of the NWP, the prospective permittee must notify the district engineer by submitting a pre-construction notification (PCN) as early as possible. The district engineer must determine if the PCN is complete within 30 calendar days of the date of receipt and, if the PCN is determined to be incomplete, notify the prospective permittee within that 30 day period to request the additional information necessary to make the PCN complete. The request must specify the information needed to make the PCN complete. As a general rule, district engineers will request additional information necessary to make the PCN complete only once. However, if the prospective permittee does not provide all of the requested information, then the district engineer will notify the prospective permittee that the PCN is still incomplete and the PCN review process will not commence until all of the requested information has been received by the district engineer. The prospective permittee shall not begin the activity until either:
        (1) He or she is notified in writing by the district engineer that the activity may proceed under the NWP with any special conditions imposed by the district or division engineer; or
        (2) 45 calendar days have passed from the district engineer's receipt of the complete PCN and the prospective permittee has not received written notice from the district or division engineer. However, if the permittee was required to notify the Corps pursuant to general condition 18 that listed species or critical habitat might be affected or are in the vicinity of the activity, or to notify the Corps pursuant to general condition 20 that the activity might have the potential to cause effects to historic properties, the permittee cannot begin the activity until receiving written notification from the Corps that there is ''no effect'' on listed species or ''no potential to cause effects'' on historic properties, or that any consultation required under Section 7 of the Endangered Species Act (see 33 CFR 330.4(f)) and/or Section 106 of the National Historic Preservation Act (see 33 CFR 330.4(g)) has been completed. Also, work cannot begin under NWPs 21, 49, or 50 until the permittee has received written approval from the Corps. If the proposed activity requires a written waiver to exceed specified limits of an NWP, the permittee may not begin the activity until the district engineer issues the waiver. If the district or division engineer notifies the permittee in writing that an individual permit is required within 45 calendar days of receipt of a complete PCN, the permittee cannot begin the activity until an individual permit has been obtained. Subsequently, the permittee's right to proceed under the NWP may be modified, suspended, or revoked only in accordance with the procedure set forth in 33 CFR 330.5(d)(2).
    (b) Contents of pre-Construction Notification: The PCN must be in writing and include the following information:
        (1) Name, address and telephone numbers of the prospective permittee;
        (2) Location of the proposed activity;
        (3) Identify the specific NWP or NWP(s) the prospective permittee wants to use to authorize the proposed activity;
        (4) A description of the proposed activity; the activity's purpose; direct and indirect adverse environmental effects the activity would cause, including the anticipated amount of loss of wetlands, other special aquatic sites, and other waters expected to result from the NWP activity, in acres, linear feet, or other appropriate unit of measure; a description of any proposed mitigation measures intended to reduce the adverse environmental effects caused by the proposed activity; and any other NWP(s), regional general permit(s), or individual permit(s) used or intended to be used to authorize any part of the proposed project or any related activity, including other separate and distant crossings for linear projects that require Department of the Army authorization but do not require pre-construction notification. The description of the proposed activity and any proposed mitigation measures should be sufficiently detailed to allow

the district engineer to determine that the adverse environmental effects of the activity will be no more than minimal and to determine the need for compensatory mitigation or other mitigation measures. For single and complete linear projects, the PCN must include the quantity of anticipated losses of wetlands, other special aquatic sites, and other waters for each single and complete crossing of those wetlands, other special aquatic sites, and other waters. Sketches should be provided when necessary to show that the activity complies with the terms of the NWP. (Sketches usually clarify the activity and when provided results in a quicker decision. Sketches should contain sufficient detail to provide an illustrative description of the proposed activity (e.g., a conceptual plan), but do not need to be detailed engineering plans);

(5) The PCN must include a delineation of wetlands, other special aquatic sites, and other waters, such as lakes and ponds, and perennial, intermittent, and ephemeral streams, on the project site. Wetland delineations must be prepared in accordance with the current method required by the Corps. The permittee may ask the Corps to delineate the special aquatic sites and other waters on the project site, but there may be a delay if the Corps does the delineation, especially if the project site is large or contains many wetlands, other special aquatic sites, and other waters. Furthermore, the 45 day period will not start until the delineation has been submitted to or completed by the Corps, as appropriate;

(6) If the proposed activity will result in the loss of greater than 1/10-acre of wetlands and a PCN is required, the prospective permittee must submit a statement describing how the mitigation requirement will be satisfied, or explaining why the adverse environmental effects are no more than minimal and why compensatory mitigation should not be required. As an alternative, the prospective permittee may submit a conceptual or detailed mitigation plan.

(7) For non-federal permittees, if any listed species or designated critical habitat might be affected or is in the vicinity of the activity, or if the activity is located in designated critical habitat, the PCN must include the name(s) of those endangered or threatened species that might be affected by the proposed activity or utilize the designated critical habitat that might be affected by the proposed activity. For NWP activities that require pre-construction notification, Federal permittees must provide documentation demonstrating compliance with the Endangered Species Act;

(8) For non-federal permittees, if the NWP activity might have the potential to cause effects to a historic property listed on, determined to be eligible for listing on, or potentially eligible for listing on, the National Register of Historic Places, the PCN must state which historic property might have the potential to be affected by the proposed activity or include a vicinity map indicating the location of the historic property. For NWP activities that require pre-construction notification, Federal permittees must provide documentation demonstrating compliance with Section 106 of the National Historic Preservation Act;

(9) For an activity that will occur in a component of the National Wild and Scenic River System, or in a river officially designated by Congress as a ''study river'' for possible inclusion in the system while the river is in an official study status, the PCN must identify the Wild and Scenic River or the ''study river'' (see general condition 16); and

(10) For an activity that requires permission from the Corps pursuant to 33 U.S.C. 408 because it will alter or temporarily or permanently occupy or use a U.S. Army Corps of Engineers federally authorized civil works project, the pre-construction notification must include a statement confirming that the project proponent has submitted a written request for section 408 permission from the Corps office having jurisdiction over that USACE project.

(c) Form of Pre-Construction Notification: The standard individual permit application form (Form ENG 4345) may be used, but the completed application form must clearly indicate that it is an NWP PCN and must include all of the applicable information required in paragraphs (b)(1) through (10) of this general condition. A letter containing the required information may also be used. Applicants may provide electronic files of PCNs and supporting materials if the district engineer has established tools and procedures for electronic submittals.

(d) Agency Coordination: (1) The district engineer will consider any comments from Federal and state agencies concerning the proposed activity's compliance with the terms and conditions of the NWPs and the need for mitigation to reduce the activity's adverse environmental effects so that they are no more than minimal.

(2) Agency coordination is required for: (i) All NWP activities that require pre-construction notification and result in the loss of greater than 1/2-acre of waters of the United States; (ii) NWP 21, 29, 39, 40, 42, 43, 44, 50, 51, and 52 activities that require pre-construction notification and will result in the loss of greater than 300 linear feet of stream bed; (iii) NWP 13 activities in excess of 500 linear feet, fills greater than one cubic yard per running foot, or involve discharges of dredged or fill material into special aquatic sites; and (iv) NWP 54 activities in excess of 500 linear feet, or that extend into the waterbody more than 30 feet from the mean low water line in tidal waters or the ordinary high water mark in the Great Lakes.

(3) When agency coordination is required, the district engineer will immediately provide (e.g., via email, facsimile transmission, overnight mail, or other expeditious manner) a copy of the complete PCN to the appropriate Federal or state offices (FWS, state natural resource or water quality agency, EPA, and, if appropriate, the NMFS). With the exception of NWP 37, these agencies will have 10 calendar days from the date the material is transmitted to notify the district engineer via telephone, facsimile transmission, or email that they intend to provide substantive, site-specific comments. The comments must explain

why the agency believes the adverse environmental effects will be more than minimal. If so contacted by an agency, the district engineer will fully consider agency comments received within the specified time frame concerning the proposed activity's compliance with the terms and conditions of the NWPs, including the need for mitigation to ensure the net adverse environmental effects of the proposed activity are no more than minimal. The district engineer will provide no response to the resource agency, except as provided below. The district engineer will indicate in the administrative record associated with each pre-construction notification that the resource agencies' concerns were considered. For NWP 37, the emergency watershed protection and rehabilitation activity may proceed immediately in cases where there is an unacceptable hazard to life or a significant loss of property or economic hardship will occur. The district engineer will consider any comments received to decide whether the NWP 37 authorization should be modified, suspended, or revoked in accordance with the procedures at 33 CFR 330.5.

(4) In cases of where the prospective permittee is not a Federal agency, the district engineer will provide a response to NMFS within 30 calendar days of receipt of any Essential Fish Habitat conservation recommendations, as required by section 305(b)(4)(B) of the Magnuson-Stevens Fishery Conservation and Management Act.

(5) Applicants are encouraged to provide the Corps with either electronic files or multiple copies of preconstruction notifications to expedite agency coordination.

D. District Engineer's Decision

1. In reviewing the PCN for the proposed activity, the district engineer will determine whether the activity authorized by the NWP will result in more than minimal individual or cumulative adverse environmental effects or may be contrary to the public interest. If a project proponent requests authorization by a specific NWP, the district engineer should issue the NWP verification for that activity if it meets the terms and conditions of that NWP, unless he or she determines, after considering mitigation, that the proposed activity will result in more than minimal individual and cumulative adverse effects on the aquatic environment and other aspects of the public interest and exercises discretionary authority to require an individual permit for the proposed activity. For a linear project, this determination will include an evaluation of the individual crossings of waters of the United States to determine whether they individually satisfy theterms and conditions of the NWP(s), as well as the cumulative effects caused by all of the crossings authorized by NWP. If an applicant requests a waiver of the 300 linear foot limit on impacts to streams or of an otherwise applicable limit, as provided for in NWPs 13, 21, 29, 36, 39, 40, 42, 43, 44, 50, 51, 52, or 54, the district engineer will only grant the waiver upon a written determination that the NWP activity will result in only minimal individual and cumulative adverse environmental effects. For those NWPs that have a waivable 300 linear foot limit for losses of intermittent and ephemeral stream bed and a 1/2-acre limit (i.e., NWPs 21, 29, 39, 40, 42, 43, 44, 50, 51, and 52), the loss of intermittent and ephemeral stream bed, plus any other losses of jurisdictional waters and wetlands, cannot exceed 1/2-acre.

2. When making minimal adverse environmental effects determinations the district engineer will consider the direct and indirect effects caused by the NWP activity. He or she will also consider the cumulative adverse environmental effects caused by activities authorized by NWP and whether those cumulative adverse environmental effects are no more than minimal. The district engineer will also consider site specific factors, such as the environmental setting in the vicinity of the NWP activity, the type of resource that will be affected by the NWP activity, the functions provided by the aquatic resources that will be affected by the NWP activity, the degree or magnitude to which the aquatic resources perform those functions, the extent that aquatic resource functions will be lost as a result of the NWP activity (e.g., partial or complete loss), the duration of the adverse effects (temporary or permanent), the importance of the aquatic resource functions to the region (e.g., watershed or ecoregion), and mitigation required by the district engineer. If an appropriate functional or condition assessment method is available and practicable to use, that assessment method may be used by the district engineer to assist in the minimal adverse environmental effects determination. The district engineer may add case-specific special conditions to the NWP authorization to address site-specific environmental concerns.

3. If the proposed activity requires a PCN and will result in a loss of greater than 1/10-acre of wetlands, the prospective permittee should submit a mitigation proposal with the PCN. Applicants may also propose compensatory mitigation for NWP activities with smaller impacts, or for impacts to other types of waters (e.g., streams). The district engineer will consider any proposed compensatory mitigation or other mitigation measures the applicant has included in the proposal in determining whether the net adverse environmental effects of the proposed activity are no more than minimal. The compensatory mitigation proposal may be either conceptual or detailed. If the district engineer determines that the activity complies with the terms and conditions of the NWP and that the adverse environmental effects are no more than minimal, after considering mitigation, the district engineer will notify the permittee and include any activity- specific conditions in the NWP verification the district engineer deems necessary. Conditions for compensatory mitigation requirements must comply with the appropriate provisions at 33 CFR 332.3(k). The district engineer must approve the final mitigation plan before the permittee commences work in waters of the United States, unless the district engineer determines that prior approval of the final mitigation plan is not practicable or not necessary to ensure timely completion of the required compensatory mitigation. If the prospective permittee elects to submit a compensatory mitigation plan with the PCN, the district engineer will expeditiously review the proposed compensatory mitigation plan. The district engineer must review the proposed compensatory mitigation plan within 45 calendar days of receiving a complete PCN and determine whether the proposed mitigation would ensure the NWP activity results in no more than minimal adverse environmental effects. If the net adverse environmental effects of the NWP activity (after consideration of the mitigation proposal) are determined by the district engineer to be no more than minimal, the district engineer will provide a timely written response to the applicant. The response will state that the NWP activity can proceed under the terms and conditions of the

NWP, including any activity-specific conditions added to the NWP authorization by the district engineer.
4. If the district engineer determines that the adverse environmental effects of the proposed activity are more than minimal, then the district engineer will notify the applicant either: (a) That the activity does not qualify for authorization under the NWP and instruct the applicant on the procedures to seek authorization under an individual permit; (b) that the activity is authorized under the NWP subject to the applicant's submission of a mitigation plan that would reduce the adverse environmental effects so that they are no more than minimal; or (c) that the activity is authorized under the NWP with specific modifications or conditions. Where the district engineer determines that mitigation is required to ensure no more than minimal adverse environmental effects, the activity will be authorized within the 45-day PCN period (unless additional time is required to comply with general conditions 18, 20, and/or 31, or to evaluate PCNs for activities authorized by NWPs 21, 49, and 50), with activity-specific conditions that state the mitigation requirements. The authorization will include the necessary conceptual or detailed mitigation plan or a requirement that the applicant submit a mitigation plan that would reduce the adverse environmental effects so that they are no more than minimal. When compensatory mitigation is required, no work in waters of the United States may occur until the district engineer has approved a specific mitigation plan or has determined that prior approval of a final mitigation plan is not practicable or not necessary to ensure timely completion of the required compensatory mitigation.

E. Further Information

1. District Engineers have authority to determine if an activity complies with the terms and conditions of an NWP.
2. NWPs do not obviate the need to obtain other federal, state, or local permits, approvals, or authorizations required by law.
3. NWPs do not grant any property rights or exclusive privileges.
4. NWPs do not authorize any injury to the property or rights of others.
5. NWPs do not authorize interference with any existing or proposed Federal project (see General condition 32).

F. Definitions

Best management practices (BMPs): Policies, practices, procedures, or structures implemented to mitigate the adverse environmental effects on surface water quality resulting from development. BMPs are categorized as structural or non-structural.

Compensatory mitigation: The restoration (re-establishment or rehabilitation), establishment (creation), enhancement, and/or in certain circumstances preservation of aquatic resources for the purposes of offsetting unavoidable adverse impacts which remain after all appropriate and practicable avoidance and minimization has been achieved.

Currently serviceable: Useable as is or with some maintenance, but not so degraded as to essentially require reconstruction.

Direct effects: Effects that are caused by the activity and occur at the same time and place.

Discharge: The term ''discharge'' means any discharge of dredged or fill material into waters of the United States.

Ecological reference: A model used to plan and design an aquatic habitat and riparian area restoration, enhancement, or establishment activity under NWP 27. An ecological reference may be based on the structure, functions, and dynamics of an aquatic habitat type or a riparian area type that currently exists in the region where the proposed NWP 27 activity is located. Alternatively, an ecological reference may be based on a conceptual model for the aquatic habitat type or riparian area type to be restored, enhanced, or established as a result of the proposed NWP 27 activity. An ecological reference takes into account the range of variation of the aquatic habitat type or riparian area type in the region.

Enhancement: The manipulation of the physical, chemical, or biological characteristics of an aquatic resource to heighten, intensify, or improve a specific aquatic resource function(s). Enhancement results in the gain of selected aquatic resource function(s), but may also lead to a decline in other aquatic resource function(s). Enhancement does not result in a gain in aquatic resource area.

Ephemeral stream: An ephemeral stream has flowing water only during, and for a short duration after, precipitation events in a typical year. Ephemeral stream beds are located above the water table year-round. Groundwater is not a source of water for the stream. Runoff from rainfall is the primary source of water for stream flow.

Establishment (creation): The manipulation of the physical, chemical, or biological characteristics present to develop an aquatic resource that did not previously exist at an upland site. Establishment results in a gain in aquatic resource area.

High Tide Line: The line of intersection of the land with the water's surface at the maximum height reached by a rising tide. The high tide line may be determined, in the absence of actual data, by a line of oil or scum along shore objects, a more or less continuous deposit of fine shell or debris on the foreshore or berm, other physical markings or characteristics, vegetation lines, tidal gages, or other suitable means that delineate the general height reached by a rising tide. The line encompasses spring high tides and other high tides that occur with periodic frequency but does not include storm surges in which there is a departure from the normal or

predicted reach of the tide due to the piling up of water against a coast by strong winds such as those accompanying a hurricane or other intense storm.

Historic Property: Any prehistoric or historic district, site (including archaeological site), building, structure, or other object included in, or eligible for inclusion in, the National Register of Historic Places maintained by the Secretary of the Interior. This term includes artifacts, records, and remains that are related to and located within such properties. The term includes properties of traditional religious and cultural importance to an Indian tribe or Native Hawaiian organization and that meet the National Register criteria (36 CFR part 60).

Independent utility: A test to determine what constitutes a single and complete non-linear project in the Corps Regulatory Program. A project is considered to have independent utility if it would be constructed absent the construction of other projects in the project area. Portions of a multi-phase project that depend upon other phases of the project do not have independent utility. Phases of a project that would be constructed even if the other phases were not built can be considered as separate single and complete projects with independent utility.

Indirect effects: Effects that are caused by the activity and are later in time or farther removed in distance, but are still reasonably foreseeable.

Intermittent stream: An intermittent stream has flowing water during certain times of the year, when groundwater provides water for stream flow. During dry periods, intermittent streams may not have flowing water. Runoff from rainfall is a supplemental source of water for stream flow.

Loss of waters of the United States: Waters of the United States that are permanently adversely affected by filling, flooding, excavation, or drainage because of the regulated activity. Permanent adverse effects include permanent discharges of dredged or fill material that change an aquatic area to dry land, increase the bottom elevation of a waterbody, or change the use of a waterbody. The acreage of loss of waters of the United States is a threshold measurement of the impact to jurisdictional waters for determining whether a project may qualify for an NWP; it is not a net threshold that is calculated after considering compensatory mitigation that may be used to offset losses of aquatic functions and services. The loss of stream bed includes the acres or linear feet of stream bed that are filled or excavated as a result of the regulated activity. Waters of the United States temporarily filled, flooded, excavated, or drained, but restored to pre-construction contours and elevations after construction, are not included in the measurement of loss of waters of the United States. Impacts resulting from activities that do not require Department of the Army authorization, such as activities eligible for exemptions under Section 404(f) of the Clean Water Act, are not considered when calculating the loss of waters of the United States.

Navigable waters: Waters subject to Section 10 of the Rivers and Harbors Act of 1899. These waters are defined at 33 CFR part 329.

Non-tidal wetland: A non-tidal wetland is a wetland that is not subject to the ebb and flow of tidal waters. Non-tidal wetlands contiguous to tidal waters are located landward of the high tide line (i.e., spring high tide line).

Open water: For purposes of the NWPs, an open water is any area that in a year with normal patterns of precipitation has water flowing or standing above ground to the extent that an ordinary high water mark can be determined. Aquatic vegetation within the area of flowing or standing water is either non-emergent, sparse, or absent. Vegetated shallows are considered to be open waters. Examples of ''open waters'' include rivers, streams, lakes, and ponds.

Ordinary High Water Mark: An ordinary high water mark is a line on the shore established by the fluctuations of water and indicated by physical characteristics, or by other appropriate means that consider the characteristics of the surrounding areas.

Perennial stream: A perennial stream has flowing water year-round during a typical year. The water table is located above the stream bed for most of the year. Groundwater is the primary source of water for stream flow. Runoff from rainfall is a supplemental source of water for stream flow.

Practicable: Available and capable of being done after taking into consideration cost, existing technology, and logistics in light of overall project purposes.

Pre-construction notification: A request submitted by the project proponent to the Corps for confirmation that a particular activity is authorized by nationwide permit. The request maybe a permit application, letter, or similar document that includes information about the proposed work and its anticipated environmental effects. Pre-construction notification may be required by the terms and conditions of a nationwide permit, or by regional conditions. A pre-construction notification may be voluntarily submitted in cases where pre-construction notification is not required and the project proponent wants confirmation that the activity is authorized by nationwide permit.

Preservation: The removal of a threat to, or preventing the decline of, aquatic resources by an action in or near those aquatic resources. This term includes activities commonly associated with the protection and maintenance of aquatic resources through the implementation of appropriate legal and physical mechanisms. Preservation does not result in a gain of aquatic resource area or functions.

Protected tribal resources: Those natural resources and properties of traditional or customary religious or cultural importance, either on or off Indian lands, retained by, or reserved by or

for, Indian tribes through treaties, statutes, judicial decisions, or executive orders, including tribal trust resources.

Re-establishment: The manipulation of the physical, chemical, or biological characteristics of a site with the goal of returning natural/historic functions to a former aquatic resource. Re-establishment results in rebuilding a former aquatic resource and results in a gain in aquatic resource area and functions.

Rehabilitation: The manipulation of the physical, chemical, or biological characteristics of a site with the goal of repairing natural/historic functions to a degraded aquatic resource. Rehabilitation results in a gain in aquatic resource function, but does not result in a gain in aquatic resource area.

Restoration: The manipulation of the physical, chemical, or biological characteristics of a site with the goal of returning natural/historic functions to a former or degraded aquatic resource. For the purpose of tracking net gains in aquatic resource area, restoration is divided into two categories: Re-establishment and rehabilitation.

Riffle and pool complex: Riffle and pool complexes are special aquatic sites under the 404(b)(1) Guidelines. Riffle and pool complexes sometimes characterize steep gradient sections of streams. Such stream sections are recognizable by their hydraulic characteristics. The rapid movement of water over a course substrate in riffles results in a rough flow, a turbulent surface, and high dissolved oxygen levels in the water. Pools are deeper areas associated with riffles. A slower stream velocity, a streaming flow, a smooth surface, and a finer substrate characterize pools.

Riparian areas: Riparian areas are lands next to streams, lakes, and estuarine-marine shorelines. Riparian areas are transitional between terrestrial and aquatic ecosystems, through which surface and subsurface hydrology connects riverine, lacustrine, estuarine, and marine waters with their adjacent wetlands, non-wetland waters, or uplands. Riparian areas provide a variety of ecological functions and services and help improve or maintain local water quality. (See general condition 23.)

Shellfish seeding: The placement of shellfish seed and/or suitable substrate to increase shellfish production. Shellfish seed consists of immature individual shellfish or individual shellfish attached to shells or shell fragments (i.e., spat on shell). Suitable substrate may consist of shellfish shells, shell fragments, or other appropriate materials placed into waters for shellfish habitat.

Single and complete linear project: A linear project is a project constructed for the purpose of getting people, goods, or services from a point of origin to a terminal point, which often involves multiple crossings of one or more waterbodies at separate and distant locations. The term ''single and complete project'' is defined as that portion of the total linear project proposed or accomplished by one owner/developer or partnership or other association of owners/developers that includes all crossings of a single water of the United States (i.e., a single waterbody) at a specific location. For linear projects crossing a single or multiple waterbodies several times at separate and distant locations, each crossing is considered a single and complete project for purposes of NWP authorization. However, individual channels in a braided stream or river, or individual arms of a large, irregularly shaped wetland or lake, etc., are not separate waterbodies, and crossings of such features cannot be considered separately.
Single and complete non-linear project: for non-linear projects, the term ''single and complete project'' is defined at 33 CFR 330.2(i) as the total project proposed or accomplished by one owner/developer or partnership or other association of owners/developers. A single and complete non-linear project must have independent utility (see definition of ''independent utility''). Single and complete non-linear projects may not be ''piecemealed'' to avoid the limits in an NWP authorization.

Stormwater management: Stormwater management is the mechanism for controlling stormwater runoff for the purposes of reducing downstream erosion, water quality degradation, and flooding and mitigating the adverse effects of changes in land use on the aquatic environment.

Stormwater management facilities: Stormwater management facilities are those facilities, including but not limited to, stormwater retention and detention ponds and best management practices, which retain water for a period of time to control runoff and/or improve the quality (i.e., by reducing the concentration of nutrients, sediments, hazardous substances and other pollutants) of stormwater runoff.

Stream bed: The substrate of the stream channel between the ordinary high water marks. The substrate may be bedrock or inorganic particles that range in size from clay to boulders. Wetlands contiguous to the stream bed, but outside of the ordinary high water marks, are not considered part of the stream bed.

Stream channelization: The manipulation of a stream's course, condition, capacity, or location that causes more than minimal interruption of normal stream processes. A channelized stream remains a water of the United States.

Structure: An object that is arranged in a definite pattern of organization. Examples of structures include, without limitation, any pier, boat dock, boat ramp, wharf, dolphin, weir, boom, breakwater, bulkhead, revetment, riprap, jetty, artificial island, artificial reef, permanent mooring structure, power transmission line, permanently moored floating vessel, piling, aid to navigation, or any other manmade obstacle or obstruction.

Tidal wetland: A tidal wetland is a jurisdictional wetland that is inundated by tidal waters. Tidal waters rise and fall in a predictable and measurable rhythm or cycle due to the

gravitational pulls of the moon and sun. Tidal waters end where the rise and fall of the water surface can no longer be practically measured in a predictable rhythm due to masking by other waters, wind, or other effects. Tidal wetlands are located channelward of the high tide line.

Tribal lands: Any lands title to which is either: (1) Held in trust by the United States for the benefit of any Indian tribe or individual; or (2) held by any Indian tribe or individual subject to restrictions by the United States against alienation.

Tribal rights: Those rights legally accruing to a tribe or tribes by virtue of inherent sovereign authority, unextinguished aboriginal title, treaty, statute, judicial decisions, executive order or agreement, and that give rise to legally enforceable remedies.

Vegetated shallows: Vegetated shallows are special aquatic sites under the 404(b)(1) Guidelines. They are areas that are permanently inundated and under normal circumstances have rooted aquatic vegetation, such as seagrasses in marine and estuarine systems and a variety of vascular rooted plants in freshwater systems.

Waterbody: For purposes of the NWPs, a waterbody is a jurisdictional water of the United States. If a wetland is adjacent to a waterbody determined to be a water of the United States, that waterbody and any adjacent wetlands are considered together as a single aquatic unit (see 33 CFR 328.4(c)(2)). Examples of ''waterbodies'' include streams, rivers, lakes, ponds, and wetlands.

PCN – Pre-Construction Notification

******* Nationwide permit where Illinois Environmental Protection Agency has denied Section 401 Water Quality Certification.

REGULATORY JURISDICTIONAL BOUNDARIES

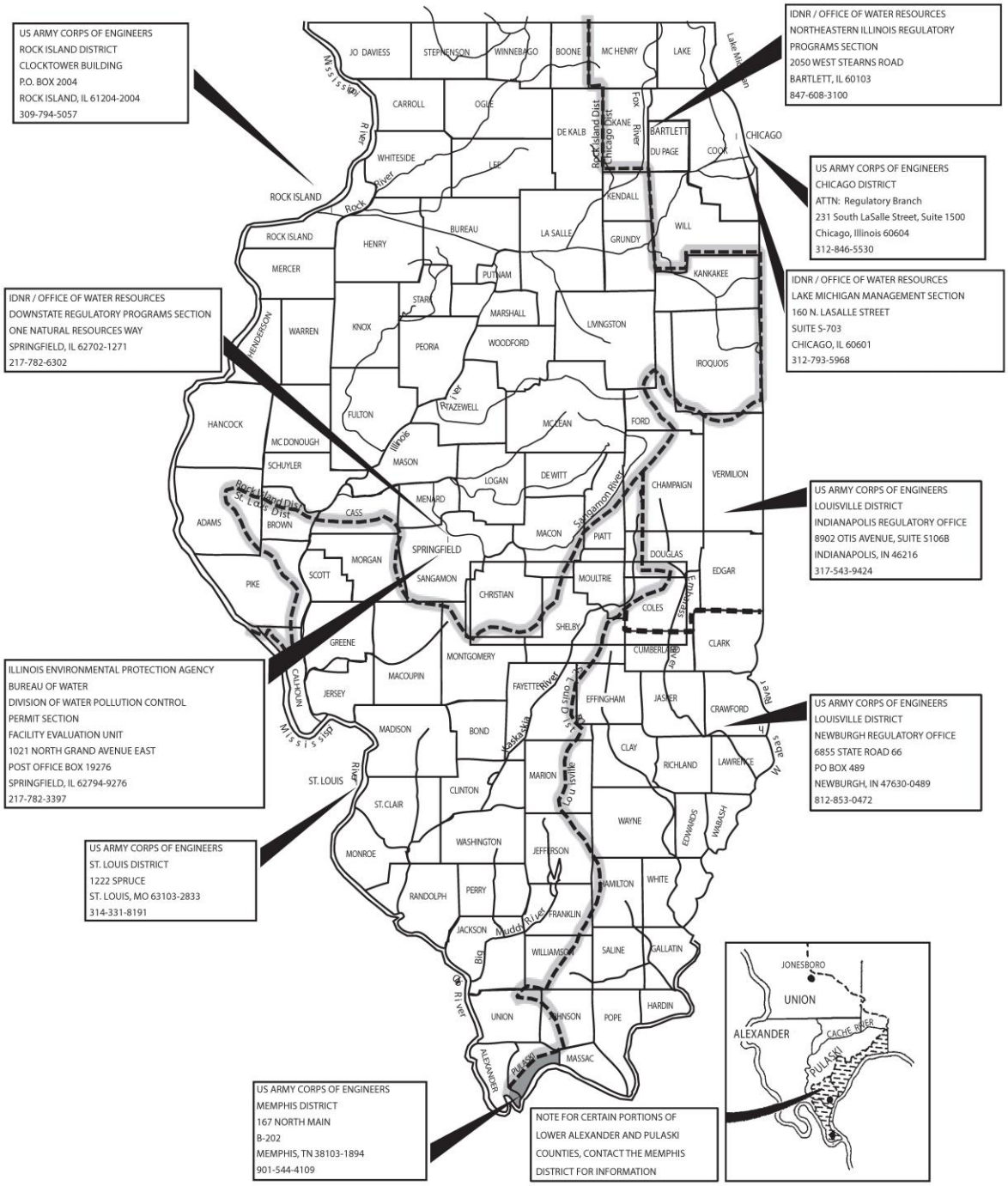

ABV	ABOVE
A/C	ACCESS CONTROL
AC	ACRE
ADJ	ADJUST
AS	AERIAL SURVEYS
AGG	AGGREGATE
AH	AHEAD
APT	APARTMENT
ASPH	ASPHALT
AUX	AUXILIARY
AGS	AUXILIARY GAS VALVE (SERVICE)
AVE	AVENUE
AX	AXIS OF ROTATION
BK	BACK
B-B	BACK TO BACK
BKPL	BACKPLATE
B	BARN
BARR	BARRICADE
BL	BASELINE
BGN	BEGIN
BM	BENCHMARK
BIND	BINDER
BIT	BITUMINOUS
BTM	BOTTOM
BLVD	BOULEVARD
BRK	BRICK
BBOX	BUFFALO BOX
BLDG	BUILDING
CATV	CABLE
CIP	CAST IRON PIPE
CB	CATCH BASIN
C-C	CENTER TO CENTER
CL	CENTERLINE OR CLEARANCE
CL-E	CENTERLINE TO EDGE
CL-F	CENTERLINE TO FACE
CTS	CENTERS
CERT	CERTIFIED
CHSLD	CHISELED
CS	CITY STREET
CP	CLAY PIPE
CLSD	CLOSED
CLID	CLOSED LID
CT	COAT OR COURT
COMB	COMBINATION
C	COMMERCIAL BUILDING
CE	COMMERCIAL ENTRANCE
CONC	CONCRETE
CONST	CONSTRUCT
CONTD	CONTINUED
CONT	CONTINUOUS
COR	CORNER
CORR	CORRUGATED
CMP	CORRUGATED METAL PIPE
CNTY	COUNTY
CH	COUNTY HIGHWAY
CSE	COURSE
XSECT	CROSS SECTION
m^3	CUBIC METER
mm^3	CUBIC MILLIMETER
CU YD	CUBIC YARD
CULV	CULVERT
C&G	CURB & GUTTER
D	DEGREE OF CURVE
DC	DEPRESSED CURVE
DET	DETECTOR
DIA	DIAMETER
DIST	DISTRICT
DOM	DOMESTIC
DBL	DOUBLE
DSEL	DOWNSTREAM ELEVATION
DSFL	DOWNSTREAM FLOWLINE
DR	DRAINAGE OR DRIVE
DI	DRAINAGE INLET OR DROP INLET
DRV	DRIVEWAY
DCT	DUCT
EA	EACH
EB	EASTBOUND
EOP	EDGE OF PAVEMENT
E-CL	EDGE TO CENTERLINE
E-E	EDGE TO EDGE
ELEC	ELECRICAL
EL	ELEVATION
ENTR	ENTRANCE
EXC	EXCAVATION
EX	EXISTING
EXPWAY	EXPRESSWAY
E	EXTERNAL DISTANCE OF HORIZONTAL CURVE
E	OFFSET DISTANCE TO VERTICAL CURVE
F-F	FACE TO FACE
FA	FEDERAL AID
FAI	FEDERAL AID INTERSTATE
FAP	FEDERAL AID PRIMARY
FAS	FEDERAL AID SECONDARY
FAUS	FEDERAL AID URBAN SECONDARY
FP	FENCE POST
OPT	FIBER OPTIC
FE	FIELD ENTRANCE
FH	FIRE HYDRANT
FL	FLOW LINE
FB	FOOT BRIDGE
FDN	FOUNDATION
FR	FRAME
F&G	FRAME & GRATE
FRWAY	FREEWAY
GAL	GALLON
GALV	GALVANIZED
G	GARAGE
GM	GAS METER
GV	GAS VALVE
GIS	GEOGRAPHICAL INFORMATION SYSTEM
GRAN	GRANULAR
GR	GRATE
GRVL	GRAVEL
GND	GROUND
GUT	GUTTER
GP	GUY POLE
GW	GUY WIRE
HH	HANDHOLE
HATCH	HATCHING
HD	HEAD
HDW	HEADWALL
HDUTY	HEAVY DUTY
ha	HECTARE
HMA	HOT MIX ASPHALT
HWY	HIGHWAY
HORIZ	HORIZONTAL
HSE	HOUSE
IL	ILLINOIS
IMP	IMPROVEMENT
IN DIA	INCH DIAMETER
INL	INLET
INST	INSTALLATION
IDS	INTERSECTION DESIGN STUDY
INV	INVERT
IP	IRON PIPE
IR	IRON ROD
JT	JOINT
kg	KILOGRAM
km	KILOMETER
LS	LANDSCAPING
LN	LANE
LT	LEFT
LIDAR	LIGHT DETECTION AND RANGING
LP	LIGHT POLE
LGT	LIGHTING
LF	LINEAL FEET OR LINEAR FEET
L	LITER OR CURVE LENGTH
LC	LONG CHORD
LNG	LONGITUDINAL
L SUM	LUMP SUM
MACH	MACHINE
MB	MAIL BOX
MH	MANHOLE
MATL	MATERIAL
MED	MEDIAN
m	METER
METH	METHOD
M	MID-ORDINATE
mm	MILLIMETER
mm DIA	MILLIMETER DIAMETER
MIX	MIXTURE
MBH	MOBILE HOME
MOD	MODIFIED
MFT	MOTOR FUEL TAX
N & BC	NAIL & BOTTLE CAP
N & C	NAIL & CAP
N & W	NAIL & WASHER
NC	NORMAL CROWN
NB	NORTHBOUND
NE	NORTHEAST
NW	NORTHWEST
O/S	OFFSET
O&C	OIL AND CHIP
OLID	OPEN LID
PAT	PATTERN
PVD	PAVED
PVMT	PAVEMENT
PM	PAVEMENT MARKING
PED	PEDESTAL
PNT	POINT
PC	POINT OF CURVATURE
PI	POINT OF INTERSECTION OF HORIZONTAL CURVE
PRC	POINT OF REVERSE CURVE
PT	POINT OF TANGENCY
POT	POINT ON TANGENT
POLYETH	POLYETHYLENE
PCC	PORTLAND CEMENT CONCRETE
PP	POWER POLE OR PRINCIPAL POINT
PRM	PRIME
PE	PRIVATE ENTRANCE
PROF	PROFILE
PGL	PROFILE GRADELINE
PROJ	PROJECT
P.C.	PROPERTY CORNER
PL	PROPERTY LINE
PR	PROPOSED
R	RADIUS or RESIDENTUAL
RR	RAILROAD
RRS	RAILROAD SPIKE
RPS	REFERENCE POINT STAKE
REF	REFLECTIVE
RCCP	REINFORCED CONCRETE CULVERT PIPE
REINF	REINFORCEMENT
REM	REMOVAL
RC	REMOVE CROWN
REP	REPLACEMENT
REST	RESTAURANT
RESURF	RESURFACING
RET	RETAINING
RT	RIGHT
ROW	RIGHT-OF-WAY
RD	ROAD
RDWY	ROADWAY
RTE	ROUTE
SAN	SANITARY
SANS	SANITARY SEWER
SEC	SECTION
SEED	SEEDING
SHAP	SHAPING
S	SHED
SH	SHEET
SHLD	SHOULDER
SW	SIDEWALK OR SOUTHWEST
SIG	SIGNAL
SOD	SODDING
SM	SOLID MEDIAN
SB	SOUTHBOUND
SE	SOUTHEAST
SPL	SPECIAL
SD	SPECIAL DITCH
SQ FT	SQUARE FEET
m^2	SQUARE METER
mm^2	SQUARE MILLIMETER
SQ YD	SQUARE YARD
STB	STABILIZED
STD	STANDARD
SBI	STATE BOND ISSUE
SR	STATE ROUTE
STA	STATION
SPBGR	STEEL PLATE BEAM GUARDRAIL
SS	STORM SEWER
STY	STORY
ST	STREET
STR	STRUCTURE
e	SUPERELEVATION RATE
S.E. RUN.	SUPERELEVATION RUNOFF LENGTH
SURF	SURFACE
SMK	SURVEY MARKER
T	TANGENT DISTANCE
T.R.	TANGENT RUNOUT DISTANCE
TEL	TELEPHONE
TB	TELEPHONE BOX
TP	TELEPHONE POLE
TEMP	TEMPORARY
TBM	TEMPORARY BENCH MARK
TD	TILE DRAIN
TBE	TO BE EXTENDED
TBR	TO BE REMOVED
TBS	TO BE SAVED
TWP	TOWNSHIP
TR	TOWNSHIP ROAD
TS	TRAFFIC SIGNAL
TSCB	TRAFFIC SIGNAL CONTROL BOX
TSC	TRAFFIC SYSTEMS CENTER
TRVS	TRANSVERSE
TRVL	TRAVEL
TRN	TURN
TY	TYPE
T-A	TYPE A
TYP	TYPICAL
UNDGND	UNDERGROUND
USGS	U.S. GEOLOGICAL SURVEY
USEL	UPSTREAM ELEVATION
USFL	UPSTREAM FLOWLINE
UTIL	UTILITY
VBOX	VALVE BOX
VV	VALVE VAULT
VLT	VAULT
VEH	VEHICLE
VP	VENT PIPE
VERT	VERTICAL
VC	VERTICAL CURVE
VPC	VERTICAL POINT OF CURVATURE
VPI	VERTICAL POINT OF INTERSECTION
VPT	VERTICAL POINT OF TANGENCY
WM	WATER METER
WV	WATER VALVE
WMAIN	WATER MAIN
WB	WESTBOUND
WILDFL	WILDFLOWERS
W	WITH
WO	WITHOUT

Illinois Department of Transportation

PASSED January 1, 2021
ENGINEER OF POLICY AND PROCEDURES

APPROVED January 1, 2021
ENGINEER OF DESIGN AND ENVIRONMENT

ISSUED 1-1-97

DATE	REVISIONS
1-1-21	Updated fonts, abbreviations
	and symbols.
1-1-19	Added new symbols.

STANDARD SYMBOLS, ABBREVIATIONS AND PATTERNS

STANDARD 000001-08

ADJUSTMENT ITEMS

	EX	PR
Structure To Be Adjusted		ADJ
Structure To Be Cleaned		C
Main Structure To Be Filled		FM
Structure To Be Filled		F
Structure To Be Filled Special		FSP
Structure To Be Removed		R
Structure To Be Reconstructed		REC
Structure To Be Reconstructed Special		RSP
Frame and Grate To Be Adjusted		A
Frame and Lid To Be Adjusted		A
Domestic Service Box To Be Adjusted		A
Valve Vault To Be Adjusted		A
Special Adjustment		SP
Item To Be Abandoned		AB
Item To Be Moved		M
Item To Be Relocated		REL
Pavement Removal and Replacement		

Illinois Department of Transportation

PASSED January 1, 2021
ENGINEER OF POLICY AND PROCEDURES
APPROVED January 1, 2021
ENGINEER OF DESIGN AND ENVIRONMENT

ISSUED 1-1-97

ALIGNMENT ITEMS

	EX	PR
Baseline		
Centerline		
Centerline Break Circle		
Baseline Symbol		
Centerline Symbol		
PI Indicator		
Point Indicator		
Horizontal Curve Data (Half Size)	EX. CURVE P.I. STA= Δ= D= R= T= L= E= e= T.R.= S.E. RUN= P.C. STA= P.T. STA=	CURVE P.I. STA= Δ= D= R= T= L= E= e= T.R.= S.E. RUN= P.C. STA= P.T. STA=

BOUNDARIES ITEMS

	EX	PR
Dashed Property Line		
Solid Property/Lot Line		
Section/Grant Line		
Quarter Section Line		
Quarter/Quarter Section Line		
County/Township Line		
State Line		
Chiseled Square Found		
Iron Pipe Found		
Iron Pipe Set		
Survey Marker		
Property Line Symbol		
Same Ownership Symbol (Half Size)		
Northwest Quarter Corner (Half Size)		
Section Corner (Half Size)		
Southeast Quarter Corner (Half Size)		

DRAINAGE ITEMS

	EX	PR
Channel or Stream Line		
Culvert Line		
Grading & Shaping Ditches		
Drainage Boundary Line		
Paved Ditch		
Aggregate Ditch		
Pipe Underdrain		
Storm Sewer		
Flowline		
Ditch Check		
Headwall		
Inlet		
Manhole		
Summit		
Roadway Ditch Flow		
Swale		
Catch Basin		
Culvert End Section		
Water Surface Indicator		
Riprap		

HYDRAULICS ITEMS

	EX	PR
Overflow		
Sheet Flow		
Hydrant Outlet		

STANDARD SYMBOLS, ABBREVIATIONS AND PATTERNS

STANDARD 000001-08

EROSION & SEDIMENT CONTROL ITEMS

	EX	PR
Cleaning & Grading Limits		
Dike		
Erosion Control Fence		
Perimeter Erosion Barrier		
Temporary Fence		
Ditch Check Temporary		
Ditch Check Permanent		
Inlet & Pipe Protection		
Sediment Basin		
Erosion Control Blanket		
Fabric Formed Concrete Revetment Mat		
Turf Reinforcement Mat		
Mulch Temporary		
Mulch Method 1		
Mulch Method 2 Stabilized		
Mulch Method 3 Hydraulic		

CONTOUR ITEMS

	EX	PR
Approx. Index Line		
Approx. Intermediate Line		
Index Contour		
Intermediate Contour		

Illinois Department of Transportation

PASSED January 1, 2021
ENGINEER OF POLICY AND PROCEDURES
APPROVED January 1, 2021
ENGINEER OF DESIGN AND ENVIRONMENT

ISSUED 1-1-97

NON-HIGHWAY IMPROVEMENT ITEMS

	EX	PR
Noise Attn./Levee		
Field Line		
Fence		
Base of Levee		
Mailbox		
Multiple Mailboxes		
Pay Telephone		
Advertising Sign		
ITS* Camera		
Wind Turbine		
Cellular Tower		

*Intelligent Transportation Systems

LANDSCAPING ITEMS

	EX	PR
Contour Mounding Line		
Fence		
Fence Post		
Shrubs		
Mowline		
Perennial Plants		
Seeding Class 2		
Seeding Class 2A		
Seeding Class 4		
Seeding Class 4 & 5 Combined		

EXISTING LANDSCAPING ITEMS (contd.)

	EX	PR
Seeding Class 5		
Seeding Class 7		
Seedlings Type 1		
Seedlings Type 2		
Sodding		
Mowstake w/Sign		
Tree Trunk Protection		
Evergreen Tree	E	
Shade Tree	E	

LIGHTING

	EX	PR
Duct		
Conduit		
Electrical Aerial Cable	A	A
Electrical Buried Cable	L	L
Controller		
Underpass Luminaire		
Power Pole		

STANDARD SYMBOLS, ABBREVIATIONS AND PATTERNS

(Sheet 3 of 9)

STANDARD 000001-08

LIGHTING (contd.)

	EX	PR
Pull Point	Ⓟ	Ⓟ
Handhole	▧	◪
Heavy Duty Handhole	Ⓗ	Ⓗ
Junction Box	ⓙ	ⓙ
Light Unit Comb.		
Electrical Ground		
Traffic Flow Arrow		
High Mast Pole (Half Size)		
Light Unit-1		

PAVEMENT (MISC.)

	EX	PR
Keyed Long. Joint		
Keyed Long. Joint w/Tie Bars		
Sawed Long. Joint w/Tie Bars		
Bituminous Shoulder		
Bituminous Taper		
Stabilized Driveway		
Widening		

PAVEMENT MARKINGS

	EX	PR
Handicap Symbol		
RR Crossing		
Raised Marker Amber 1 Way		
Raised Marker Amber 2 Way		
Raised Marker Crystal 1 Way		
Two Way Turn Left		
Shoulder Diag. Pattern		
Skip-Dash White		
Skip-Dash Yellow		
Stop Line		
Solid Line		
Double Centerline		
Dotted Lines		

Illinois Department of Transportation

PASSED January 1, 2021
ENGINEER OF POLICY AND PROCEDURES

APPROVED January 1, 2021
ENGINEER OF DESIGN AND ENVIRONMENT

ISSUED 1-1-97

STANDARD SYMBOLS, ABBREVIATIONS AND PATTERNS

STANDARD 000001-08

PAVEMENT MARKINGS (contd.)

	EX	PR
CL 2Ln 2Way RRPM 12.2 m (40') o.c.		
CL 2Ln 2Way RRPM 80' (24.4 m) o.c.		
CL Multilane Div. RRPM 40' (12.2 m) o.c.		
CL Multilane Div. RRPM 80' (24.4 m) o.c.		
CL Multilane Div. Dbl. RRPM 80' (24.4 m) o.c.		
CL Multilane Undiv.		
Two Way Turn Left Line		
Urban Combination Left		
Urban Combination Right		
Urban Left Turn Arrow		
Urban Right Turn Arrow		
Urban Left Turn Only		
Urban Right Turn Only		
Urban Thru Only		
Urban LT & RT Turn Arrow		
Urban Thru Arrow		

RAILROAD ITEMS	EX	PR
Abandoned Railroad		
Railroad		
Railroad Point		
Control Box		
Crossing Gate		
Flashing Signal		
Railroad Cant. Mast Arm		
Crossbuck		

REMOVAL ITEMS	EX	PR
Removal Tic		
Bituminous Removal		
Hatch Pattern		
Tree Removal Single		

RIGHT OF WAY ITEMS	EX	PR
Future ROW Corner Monument		
ROW Marker		
ROW Line		
Easement		
Temporary Easement		

Illinois Department of Transportation

PASSED January 1, 2021
ENGINEER OF POLICY AND PROCEDURES
APPROVED January 1, 2021
ENGINEER OF DESIGN AND ENVIRONMENT

ISSUED 1-1-97

STANDARD SYMBOLS, ABBREVIATIONS AND PATTERNS

(Sheet 5 of 9)

STANDARD 000001-08

PAVEMENT MARKINGS (contd.)

	EX	PR
Urban U-Turn		
Urban Combined U-Turn		
Rural Combination Left		
Rural Combination Right		
Rural Left Turn Arrow		
Rural Right Turn Arrow		
Rural Left Turn Only		
Rural Right Turn Only		
Rural Thru Only		
Rural Thru Arrow		
Rural Lt & Rt Turn Arrow		
Bike Lane Symbol		
Bike Lane Text		
Bike Path Shared		
Bike Shared Roadway		
Lane Drop Symbol		
Wrong Way Arrow		

Illinois Department of Transportation

PASSED January 1, 2021
ENGINEER OF POLICY AND PROCEDURES

APPROVED January 1, 2021
ENGINEER OF DESIGN AND ENVIRONMENT

ISSUED 1-1-97

STANDARD SYMBOLS, ABBREVIATIONS AND PATTERNS

(Sheet 6 of 9)

STANDARD 000001-08

RIGHT OF WAY ITEMS (contd.)

	EX	PR
Access Control Line		AC
Access Control Line & ROW	AC	AC
Access Control Line & ROW with Fence	AC	AC
Excess ROW Line		XS

ROADWAY PLAN ITEMS

	EX	PR
Cable Barrier		
Concrete Barrier		
Edge of Pavement		
Bit Shoulders, Medians and C&G Line		
Aggregate Shoulder		
Sidewalks, Driveways		
Guardrail		
Guardrail Post		
Traffic Sign		
Corrugated Median		
Impact Attenuator		
North Arrow with District Office (Half Size)		
Match Line		STA. 45+00
Slope Limit Line		
Typical Cross-Section Line		

Illinois Department of Transportation

PASSED January 1, 2021
ENGINEER OF POLICY AND PROCEDURES

APPROVED January 1, 2021
ENGINEER OF DESIGN AND ENVIRONMENT

ISSUED 1-1-97

ROADWAY PROFILES

	EX	PR
P.I. Indicator		
Point Indicator		
Earthworks Balance Point		
Begin Point		
Vert. Curve Data	VPI = ELEV= L = E =	VPI = ELEV= L = E =
Ditch Profile Left Side		
Ditch Profile Right Side		
Roadway Profile Line		
Storm Sewer Profile Left Side		
Storm Sewer Profile Right Side		

SIGNING ITEMS

	EX	PR
Cone, Drum or Barricade		
Barricade Type II		
Barricade Type III		
Barricade With Edge Line		
Flashing Light Sign		
Panels I		
Panels II		
Direction of Traffic		
Sign Flag (Half Size)		

SIGNING ITEMS (contd.)

	EX	PR
Reverse Left W1-4L (Half Size)		
Reverse Right W1-4R (Half Size)		
Two Way Traffic Sign W6-3 (Half Size)		
Detour Ahead W20-2(O) (Half Size)		DETOUR AHEAD
Left Lane Closed Ahead W20-5L(O) (Half Size)		LEFT LANE CLOSED AHEAD
Right Lane Closed Ahead W20-5R(O) (Half Size)		RIGHT LANE CLOSED AHEAD
Road Closed Ahead W20-3(O) (Half Size)		ROAD CLOSED AHEAD
Road Construction Ahead W20-1-(O) (Half Size)		ROAD CONSTRUCTION AHEAD
Single Lane Ahead (Half Size)		SINGLE LANE AHEAD
Transition Left W4-2L (Half Size)		
Transition Right W4-2R (Half Size)		

STANDARD SYMBOLS, ABBREVIATIONS AND PATTERNS

(Sheet 7 of 9)

STANDARD 000001-08

SIGNING ITEMS (contd.)

	EX	PR
One Way Arrow Lrg. W1-6-(O) (Half Size)		
Two Way Arrow Large W1-7-(O) (Half Size)		
Detour M4-10L-(O) (Half Size)		DETOUR
Detour M4-10R-(O) (Half Size)		DETOUR
One Way Left R6-1L (Half Size)		ONE WAY
One Way Right R6-1R (Half Size)		ONE WAY
Left Turn Lane R3-I100L (Half Size)		LEFT TURN LANE
Keep Left R4-7AL (Half Size)		KEEP LEFT
Keep Left R4-7BL (Half Size)		KEEP LEFT
Keep Right R4-7AR (Half Size)		KEEP RIGHT
Keep Right R4-7BR (Half Size)		KEEP RIGHT
Stop Here On Red R10-6-AL (Half Size)		STOP HERE ON RED
Stop Here On Red R10-6-AR (Half Size)		STOP HERE ON RED
No Left Turn R3-2 (Half Size)		
No Right Turn R3-1 (Half Size)		
Road Closed R11-2 (Half Size)		ROAD CLOSED
Road Closed Thru Traffic R11-2 (Half Size)		ROAD CLOSED TO THRU TRAFFIC

Illinois Department of Transportation

PASSED January 1, 2021

ENGINEER OF POLICY AND PROCEDURES

APPROVED January 1, 2021

ENGINEER OF DESIGN AND ENVIRONMENT

ISSUED 1-1-97

STRUCTURES ITEMS

	EX	PR
Box Culvert Barrel		
Box Culvert Headwall		
Bridge Pier		
Bridge		
Retaining Wall		
Temporary Sheet Piling		

TRAFFIC SHEET ITEMS

	EX	PR
Cable Number		
Left Turn Green	G	G
Left Turn Yellow	Y	Y
Signal Backplate		
Signal Section 8" (200 mm)		
Signal Section 12" (300 mm)		
Walk/Don't Walk Letters	DW W	DW W
Walk/Don't Walk Symbols		

TRAFFIC SIGNAL ITEMS

	EX	PR
Galv. Steel Conduit		
Underground Cable		
Detector Loop Line		
Detector Loop Large		
Detector Loop Small		
Detector Loop Quadrapole		

STANDARD SYMBOLS, ABBREVIATIONS AND PATTERNS

(Sheet 8 of 9)

STANDARD 000001-08

TRAFFIC SIGNAL ITEMS (contd.)

	EX	PR
Detector Raceway		
Aluminum Mast Arm		
Steel Mast Arm		
Veh. Detector Magnetic		
Conduit Splice		
Controller		
Gulfbox Junction		
Wood Pole		
Temp. Signal Head		
Handhole		
Double Handhole		
Heavy Duty Handhole		
Junction Box		
Ped. Pushbutton Detector		
Ped. Signal Head		
Power Pole Service		
Priority Veh. Detector		
Signal Head		
Signal Head w/Backplate		
Signal Post		
Closed Circuit TV		
Video Detector System		

Illinois Department of Transportation

PASSED January 1, 2021
ENGINEER OF POLICY AND PROCEDURES
APPROVED January 1, 2021
ENGINEER OF DESIGN AND ENVIRONMENT

ISSUED 1-1-97

UNDERGROUND UTILITY ITEMS

	EX	PR	ABANDONED
Cable TV	CTV	CTV	CTV
Electric Cable	E	E	E
Fiber Optic	FO	FO	FO
Gas Pipe	G	G	G
Oil Pipe	O	O	O
Sanitary Sewer			
Telephone Cable	T	T	T
Water Pipe	W	W	W

UTILITIES ITEMS

	EX	PR
Controller		
Double Handhole		
Fire Hydrant		
GuyWire or Deadman Anchor		
Handhole		
Heavy Duty Handhole		
Junction Box		
Light Pole		
Manhole		
Monitoring Well (Gasoline)		
Pipeline Warning Sign		
Power Pole		
Power Pole with Light		
Sanitary Sewer Cleanout		
Splice Box Above Ground		
Telephone Splice Box Above Ground		
Telephone Pole		

UTILITY ITEMS (contd.)

	EX	PR
Traffic Signal		
Traffic Signal Control Box		
Water Meter		
Water Meter Valve Box		
Profile Line		
Aerial Power Line	A A	A A

VEGETATION ITEMS

	EX	PR
Deciduous Tree		
Bush or Shrub		
Evergreen Tree		
Stump		
Orchard/Nursery Line		
Vegetation Line		
Woods & Bush Line		

WATER FEATURE ITEMS

	EX	PR
Stream or Drainage Ditch		
Waters Edge		
Water Surface Indicator		
Water Point		
Disappearing Ditch		
Marsh		
Marsh/Swamp Boundary		

STANDARD SYMBOLS, ABBREVIATIONS AND PATTERNS

STANDARD 000001-08

REINFORCEMENT BARS - ENGLISH (METRIC)

Bar Size English (metric)	Dia. in. mm	Cross-Sectional Area sq. in. (sq. mm)	Weight lbs./ft. kg/m	SPACING, in. (mm)													
				4 (100)	4½ (115)	5 (125)	5½ (140)	6 (150)	6½ (165)	7 (175)	7½ (190)	8 (200)	8½ (215)	9 (225)	10 (250)	11 (275)	12 (300)
				AREA OF STEEL PER FOOT (METER), sq. in. (sq. mm)													
3 (10)	0.375 (9.5)	0.110 (71)	0.376 (0.560)	0.330 (710)	0.293 (617)	0.264 (568)	0.240 (507)	0.220 (473)	0.203 (430)	0.189 (406)	0.176 (374)	0.165 (355)	0.155 (330)	0.147 (316)	0.132 (284)	0.120 (258)	0.110 (237)
4 (13)	0.500 (12.7)	0.196 (129)	0.668 (0.944)	0.588 (1290)	0.523 (1122)	0.470 (1032)	0.428 (921)	0.392 (860)	0.362 (782)	0.336 (737)	0.314 (679)	0.294 (645)	0.277 (600)	0.261 (573)	0.235 (516)	0.214 (469)	0.196 (430)
5 (16)	0.625 (15.9)	0.307 (199)	1.043 (1.552)	0.921 (1990)	0.819 (1730)	0.737 (1592)	0.670 (1421)	0.614 (1327)	0.567 (1206)	0.526 (1137)	0.491 (1047)	0.461 (995)	0.433 (926)	0.409 (884)	0.368 (796)	0.335 (724)	0.307 (663)
6 (19)	0.750 (19.1)	0.442 (284)	1.502 (2.235)	1.326 (2840)	1.179 (2470)	1.061 (2272)	0.964 (2029)	0.884 (1893)	0.816 (1721)	0.758 (1623)	0.707 (1495)	0.663 (1420)	0.624 (1321)	0.589 (1262)	0.530 (1136)	0.482 (1033)	0.442 (947)
7 (22)	0.875 (22.2)	0.601 (387)	2.044 (3.042)	1.803 (3870)	1.603 (3365)	1.442 (3096)	1.311 (2764)	1.202 (2580)	1.110 (2345)	1.030 (2211)	0.962 (2037)	0.902 (1935)	0.848 (1800)	0.801 (1720)	0.721 (1548)	0.656 (1407)	0.601 (1290)
8 (25)	1.000 (25.4)	0.785 (510)	2.670 (3.973)	2.355 (5100)	2.093 (4435)	1.884 (4080)	1.713 (3543)	1.570 (3400)	1.449 (3091)	1.346 (2914)	1.256 (2684)	1.178 (2550)	1.108 (2372)	1.047 (2267)	0.942 (2040)	0.856 (1855)	0.785 (1700)
9 (29)	1.128 (28.7)	1.000 (645)	3.400 (5.060)	3.000 (6450)	2.667 (5609)	2.400 (5160)	2.182 (4607)	2.000 (4300)	1.846 (3909)	1.714 (3686)	1.600 (3395)	1.500 (3225)	1.412 (3000)	1.333 (2867)	1.200 (2580)	1.091 (2345)	1.000 (2150)
10 (32)	1.270 (32.3)	1.267 (819)	4.303 (6.404)	3.801 (8190)	3.379 (7122)	3.041 (6552)	2.764 (5850)	2.534 (5460)	2.339 (4964)	2.172 (4680)	2.027 (4311)	1.901 (4095)	1.789 (3809)	1.689 (3640)	1.520 (3276)	1.382 (2978)	1.267 (2730)
11 (36)	1.410 (35.8)	1.561 (1006)	5.313 (7.907)	4.683 (10060)	4.163 (8748)	3.746 (8048)	3.406 (7186)	3.122 (6707)	2.882 (6097)	2.676 (5749)	2.498 (5295)	2.342 (5030)	2.204 (4679)	2.081 (4471)	1.873 (4024)	1.703 (3658)	1.561 (3353)

Illinois Department of Transportation

PASSED January 1, 2009

ENGINEER OF POLICY AND PROCEDURES

APPROVED January 1, 2009

ENGINEER OF DESIGN AND ENVIRONMENT

ISSUED 1-1-97

DATE	REVISIONS
1-1-09	Switched units to
	English (metric).
1-1-07	Deleted metric table.
	Soft converted English
	table.

AREAS OF REINFORCEMENT BARS

STANDARD 001001-02

DECIMAL OF AN INCH AND OF A FOOT

A		B
	0.0052	1/16
	0.0104	1/8
1/64	0.015625	3/16
	0.0208	1/4
	0.0260	5/16
1/32	0.03125	3/8
	0.0365	7/16
	0.0417	1/2
3/64	0.046875	9/16
	0.0521	5/8
	0.0573	11/16
1/16	0.0625	3/4
	0.0677	13/16
	0.0729	7/8
5/64	0.078125	15/16
	0.0833	1
	0.0885	1 1/16
3/32	0.09375	1 1/8
	0.0990	1 3/16
	0.1042	1 1/4
7/64	0.109375	1 5/16
	0.1146	1 3/8
	0.1198	1 7/16
1/8	0.1250	1 1/2
	0.1302	1 9/16
	0.1354	1 5/8
9/64	0.140625	1 11/16
	0.1458	1 3/4
	0.1510	1 13/16
5/32	0.15625	1 7/8
	0.1615	1 15/16
	0.1667	2

A		B
11/64	0.171875	2 1/16
	0.1771	2 1/8
	0.1823	2 3/16
3/16	0.1875	2 1/4
	0.1927	2 5/16
	0.1979	2 3/8
13/64	0.203125	2 7/16
	0.2083	2 1/2
	0.2135	2 9/16
7/32	0.21875	2 5/8
	0.2240	2 11/16
	0.2292	2 3/4
15/64	0.234375	2 13/16
	0.2396	2 7/8
	0.2448	2 15/16
1/4	0.2500	3
	0.2552	3 1/16
	0.2604	3 1/8
17/64	0.265625	3 3/16
	0.2708	3 1/4
	0.2760	3 5/16
9/32	0.28125	3 3/8
	0.2865	3 7/16
	0.2917	3 1/2
19/64	0.296875	3 9/16
	0.3021	3 5/8
	0.3073	3 11/16
5/16	0.3125	3 3/4
	0.3177	3 13/16
	0.3229	3 7/8
21/64	0.328125	3 15/16
	0.3333	4

A		B
	0.3385	4 1/16
11/32	0.34375	4 1/8
	0.3490	4 3/16
	0.3542	4 1/4
23/64	0.359375	4 5/16
	0.3646	4 3/8
	0.3698	4 7/16
3/8	0.3750	4 1/2
	0.3802	4 9/16
	0.3854	4 5/8
25/64	0.390625	4 11/16
	0.3958	4 3/4
	0.4010	4 13/16
13/32	0.40625	4 7/8
	0.4115	4 15/16
	0.4167	5
27/64	0.421875	5 1/16
	0.4271	5 1/8
	0.4323	5 3/16
7/16	0.4375	5 1/4
	0.4427	5 5/16
	0.4479	5 3/8
29/64	0.453125	5 7/16
	0.4583	5 1/2
	0.4635	5 9/16
15/32	0.46875	5 5/8
	0.4740	5 11/16
	0.4792	5 3/4
31/64	0.484375	5 13/16
	0.4896	5 7/8
	0.4948	5 15/16
1/2	0.5000	6

A		B
	0.5052	6 1/16
	0.5104	6 1/8
33/64	0.515625	6 3/16
	0.5208	6 1/4
	0.5260	6 5/16
17/32	0.53125	6 3/8
	0.5365	6 7/16
	0.5417	6 1/2
35/64	0.546875	6 9/16
	0.5521	6 5/8
	0.5573	6 11/16
9/16	0.5625	6 3/4
	0.5677	6 13/16
	0.5729	6 7/8
37/64	0.578125	6 15/16
	0.5833	7
	0.5885	7 1/16
19/32	0.59375	7 1/8
	0.5990	7 3/16
	0.6042	7 1/4
39/64	0.609375	7 5/16
	0.6146	7 3/8
	0.6198	7 7/16
5/8	0.6250	7 1/2
	0.6302	7 9/16
	0.6354	7 5/8
41/64	0.640625	7 11/16
	0.6458	7 3/4
	0.6510	7 13/16
21/32	0.65625	7 7/8
	0.6615	7 15/16
	0.6667	8

A		B
43/64	0.671875	8 1/16
	0.6771	8 1/8
	0.6823	8 3/16
11/16	0.6875	8 1/4
	0.6927	8 5/16
	0.6979	8 3/8
45/64	0.703125	8 7/16
	0.7083	8 1/2
	0.7135	8 9/16
23/32	0.71875	8 5/8
	0.7240	8 11/16
	0.7292	8 3/4
47/64	0.734375	8 13/16
	0.7396	8 7/8
	0.7448	8 15/16
3/4	0.7500	9
	0.7552	9 1/16
	0.7604	9 1/8
49/64	0.765625	9 3/16
	0.7708	9 1/4
	0.7760	9 5/16
25/32	0.78125	9 3/8
	0.7865	9 7/16
	0.7917	9 1/2
51/64	0.796875	9 9/16
	0.8021	9 5/8
	0.8073	9 11/16
13/16	0.8125	9 3/4
	0.8177	9 13/16
	0.8229	9 7/8
53/64	0.828125	9 15/16
	0.8333	10

A		B
	0.8385	10 1/16
27/32	0.84375	10 1/8
	0.8490	10 3/16
	0.8542	10 1/4
55/64	0.859375	10 5/16
	0.8646	10 3/8
	0.8698	10 7/16
7/8	0.8750	10 1/2
	0.8802	10 9/16
	0.8854	10 5/8
57/64	0.890625	10 11/16
	0.8958	10 3/4
	0.9010	10 13/16
29/32	0.90625	10 7/8
	0.9115	10 15/16
	0.9167	11
59/64	0.921875	11 1/16
	0.9271	11 1/8
	0.9323	11 3/16
15/16	0.9375	11 1/4
	0.9427	11 5/16
	0.9479	11 3/8
61/64	0.953125	11 7/16
	0.9583	11 1/2
	0.9635	11 9/16
31/32	0.96875	11 5/8
	0.9740	11 11/16
	0.9792	11 3/4
63/64	0.984375	11 13/16
	0.9896	11 7/8
	0.9948	11 15/16
1	1.0000	12

A = Fractions of Inch or Foot

B = Inch Equivalents to Foot Fractions

Illinois Department of Transportation

PASSED January 1, 1997
ENGINEER OF POLICY AND PROCEDURES

APPROVED January 1, 1997
ENGINEER OF DESIGN AND ENVIRONMENT

ISSUED 1-1-97

DATE	REVISIONS
1-1-97	New Standard.

DECIMAL OF AN INCH AND OF A FOOT

STANDARD 001006

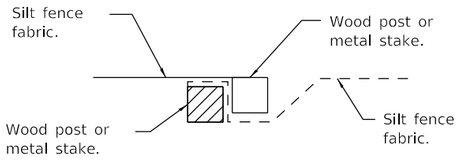

Place end-post (stake) of first silt fence adjacent to end-post (stake) of second silt fence with fabric positioned as swown.

STEP 1

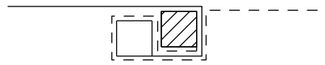

Rotate posts (stakes) together 180° clockwise and drive both posts (stakes) 18 (450) into ground.

STEP 2

ATTACHING TWO SILT FILTER FENCES

(Not applicable for J-hooks)

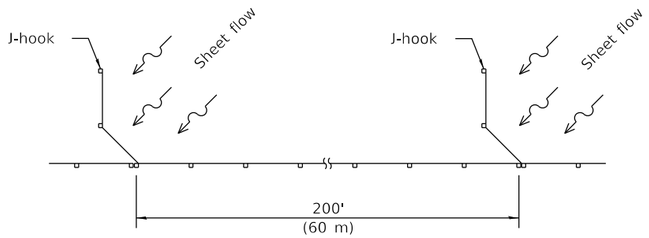

SILT FILTER J-HOOK PLACEMENT

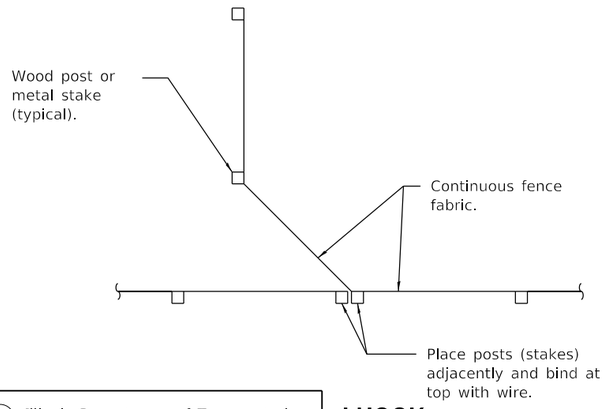

J-HOOK

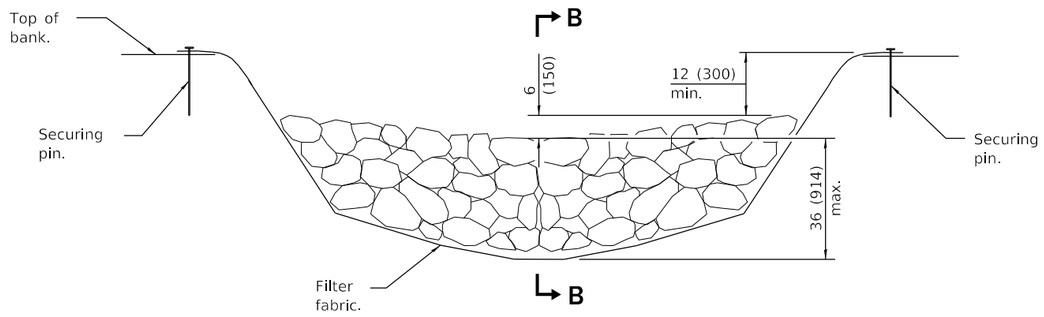

ELEVATION

* When the ditch check is within the clear zone and the road is open to traffic, the traffic approach slope of the aggregate shall be 1:4 (V:H).

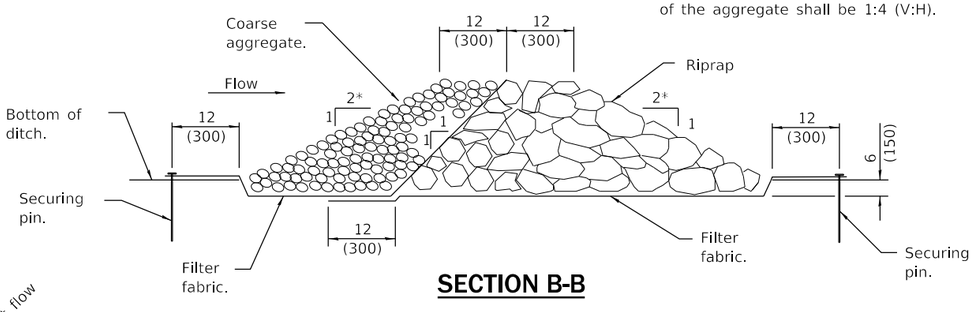

SECTION B-B

AGGREGATE DITCH CHECK

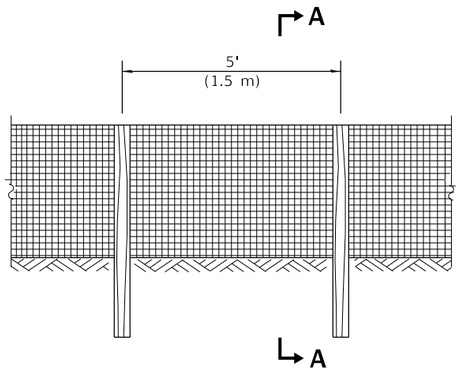

ELEVATION

SILT FILTER FENCE AS A PERIMETER EROSION BARRIER

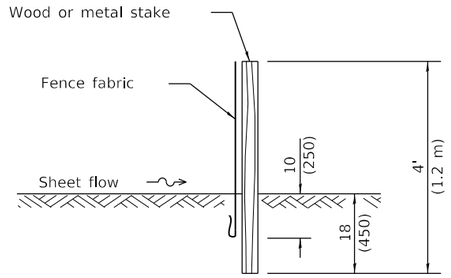

SLICE METHOD

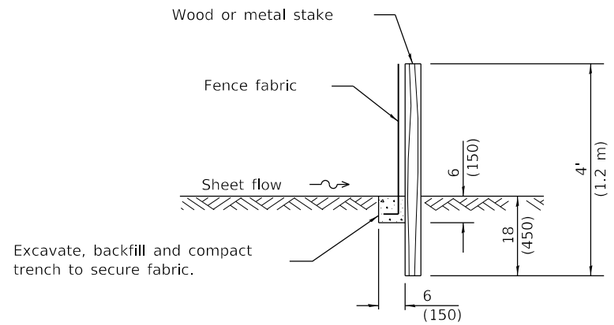

TRENCH METHOD

SECTION A-A

GENERAL NOTES

The installation details and dimensions shown for perimeter erosion barriers shall also apply for inlet and pipe protection.

All dimensions are in inches (millimeters) unless otherwise shown.

Illinois Department of Transportation

PASSED January 1, 2013
Michael Brand
ENGINEER OF POLICY AND PROCEDURES
APPROVED January 1, 2013
ENGINEER OF DESIGN AND ENVIRONMENT

ISSUED 1-1-97

DATE	REVISIONS
1-1-13	Corrected notation for
	flowline (℄) on SEDIMENT
	BASIN ELEVATION.
1-1-12	Omitted hay/straw perimeter
	barrier. Added SLICE METHOD
	to SECTION A-A.

TEMPORARY EROSION CONTROL SYSTEMS

STANDARD 280001-07

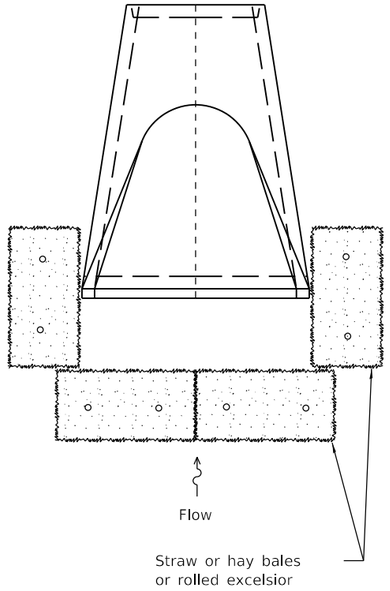

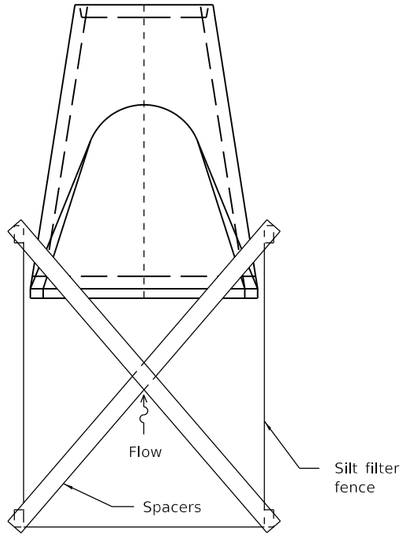

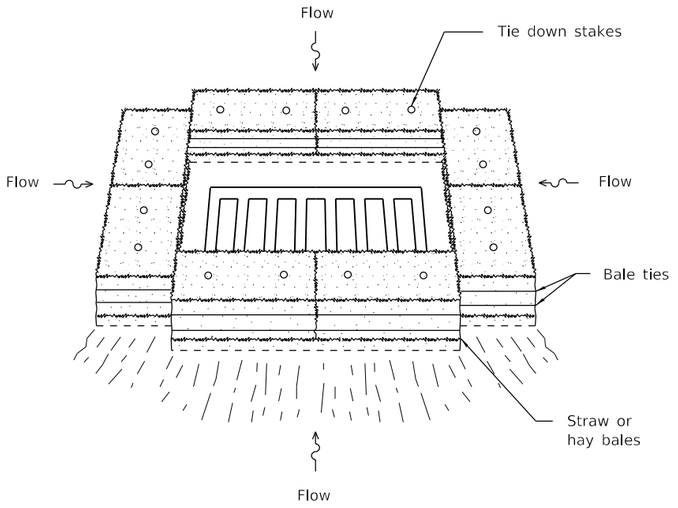

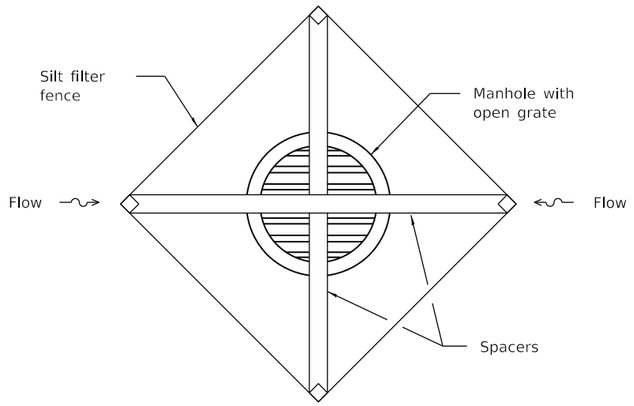

INLET AND PIPE PROTECTION

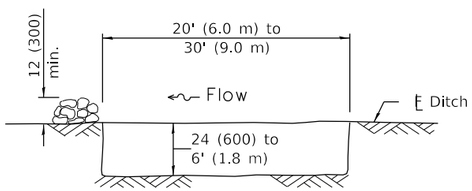

The performance of the basin
will improve if put into a series.

ELEVATION

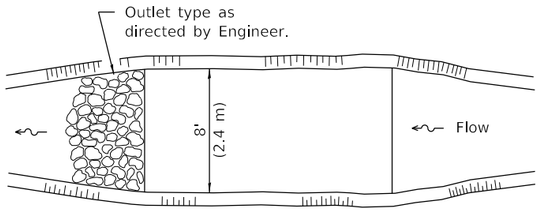

The long dimension should be parallel with the
direction of the flow. Accumulated silt shall be
removed anytime the basins become 75% filled.

PLAN

SEDIMENT BASIN

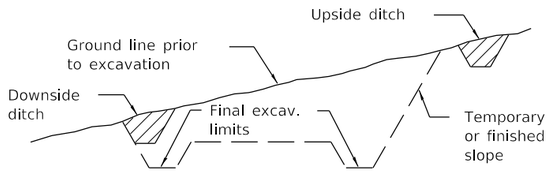

TYPICAL CUT CROSS-SECTION

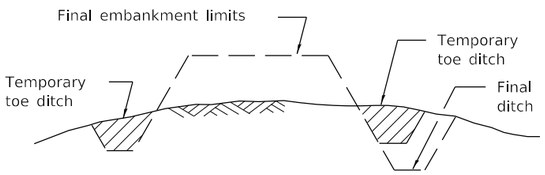

TYPICAL FILL CROSS-SECTION

**TEMPORARY DITCHES FOR
CUT & FILL SECTIONS**

Illinois Department of Transportation

PASSED January 1, 2013
Michael Brand
ENGINEER OF POLICY AND PROCEDURES
APPROVED January 1, 2013
ENGINEER OF DESIGN AND ENVIRONMENT

ISSUED 1-1-97

TEMPORARY EROSION CONTROL SYSTEMS

(Sheet 2 of 2)

STANDARD 280001-07

CLASS C

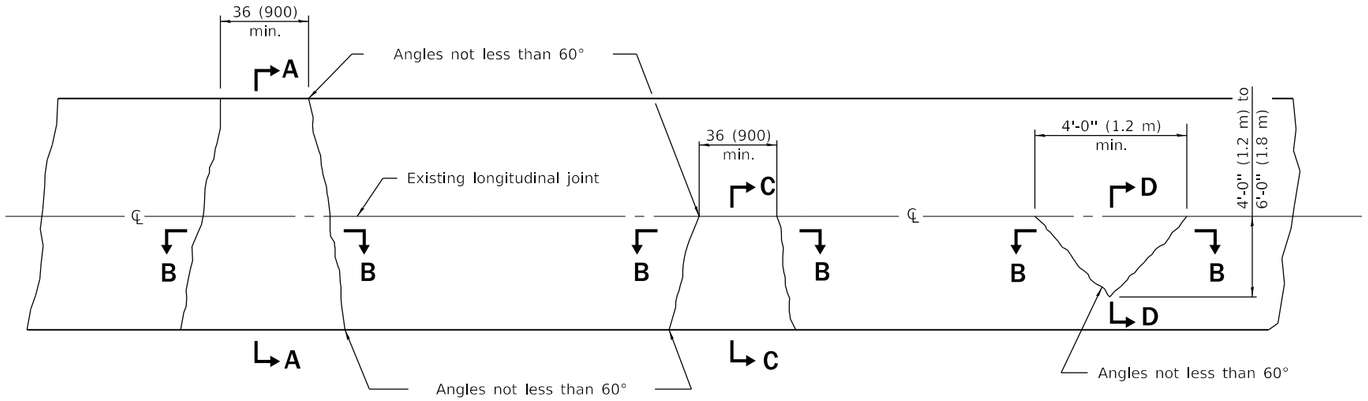

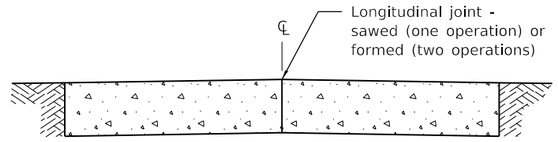

SECTION A-A

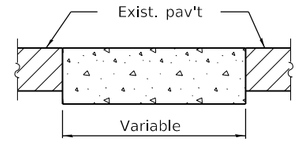

SECTION B-B

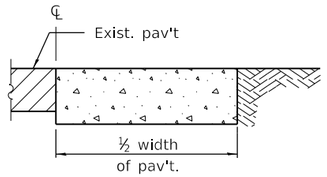

SECTION C-C

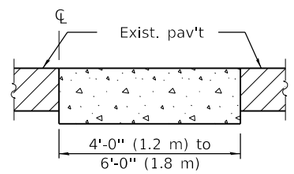

SECTION D-D

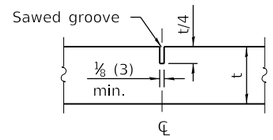

DETAIL OF SAWED CONTRACTION JOINT

Note:
Longitudinal joints shall be as detailed on Standard 420001, except tie bars are not required for patches 20'-0" (6.0 m) or less in length.

CLASS D

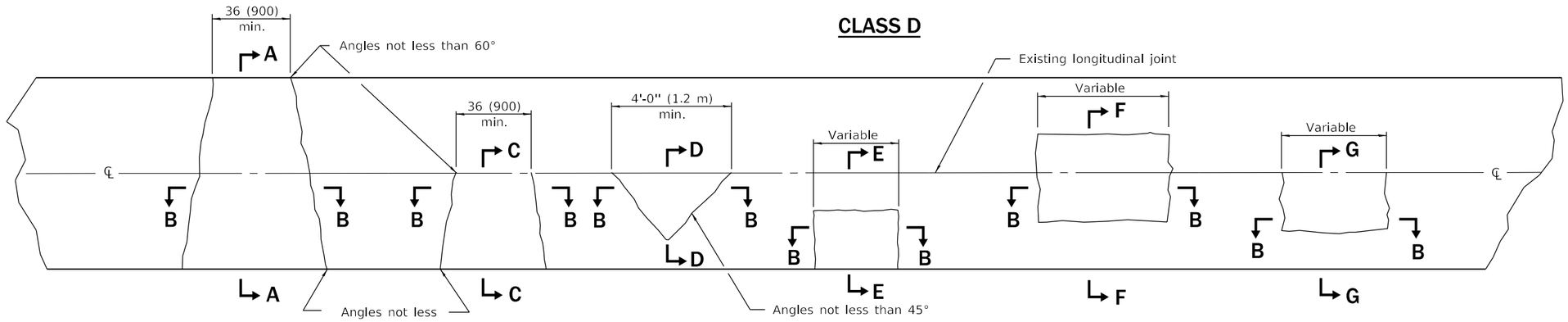

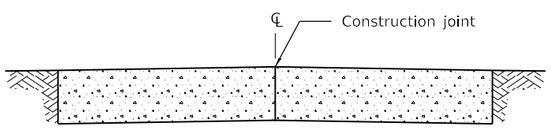

SECTION A-A
(Built in two operations)

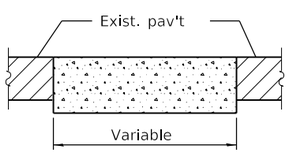

SECTION B-B

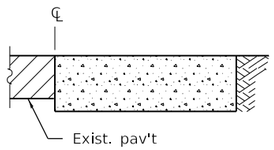

SECTION C-C

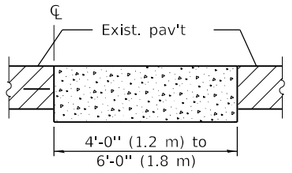

SECTION D-D

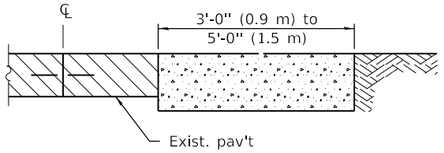

SECTION E-E

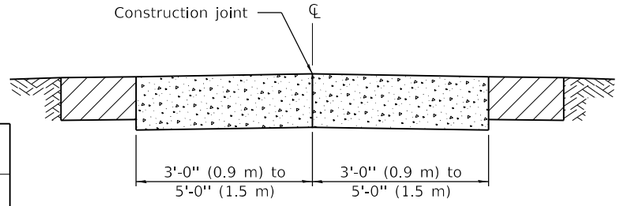

SECTION F-F
(Built in two operations)

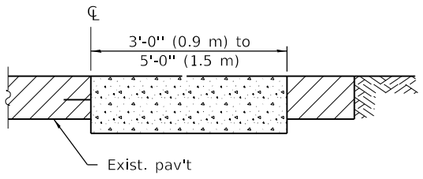

SECTION G-G

GENERAL NOTES

Existing tie bars shall be either cut or removed. Marginal bars shall be cut.

All dimensions are in inches (millimeters) unless otherwise shown.

Illinois Department of Transportation

PASSED January 1, 2008
ENGINEER OF POLICY AND PROCEDURES
APPROVED January 1, 2008
ENGINEER OF DESIGN AND ENVIRONMENT

ISSUED 1-1-97

DATE	REVISIONS
1-1-08	Switched units to
	English (metric).
1-1-07	Revised Note for
	Class C patches.

CLASS C and D PATCHES

STANDARD 442201-03

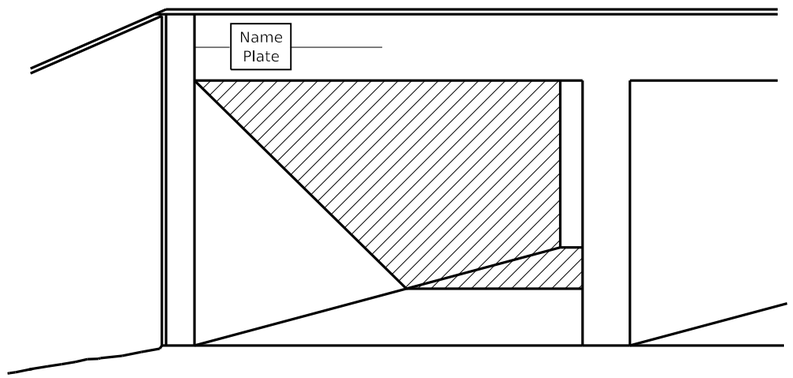

MULTI-SPAN CULVERTS

(Unless otherwise noted on the plans, name plates are not required for stuctures less than 20' (6.1 m) in length)

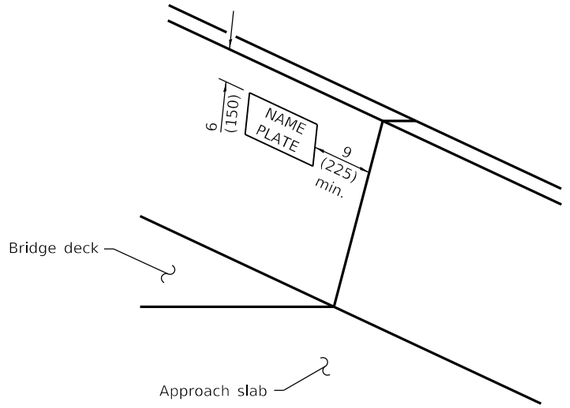

PARAPET

(Typical)

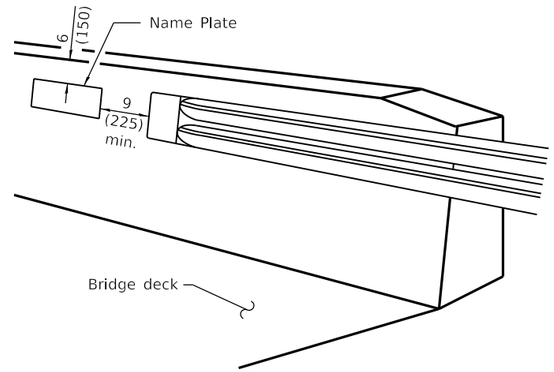

PARAPET

(Terminated at end of bridge)

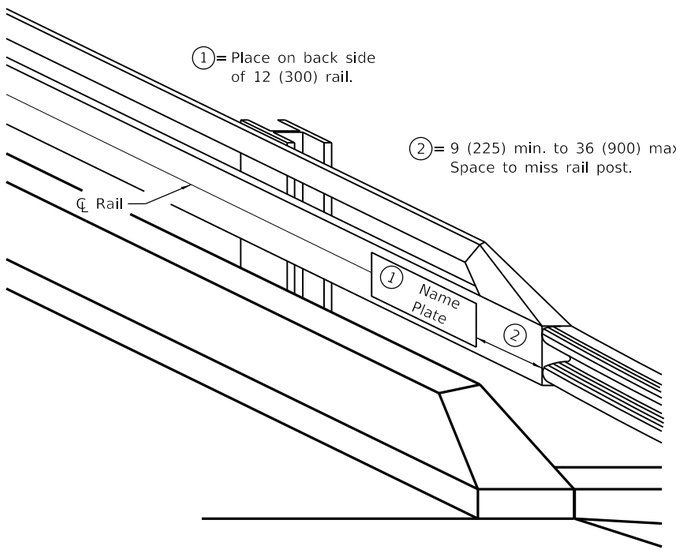

STEEL RAILS

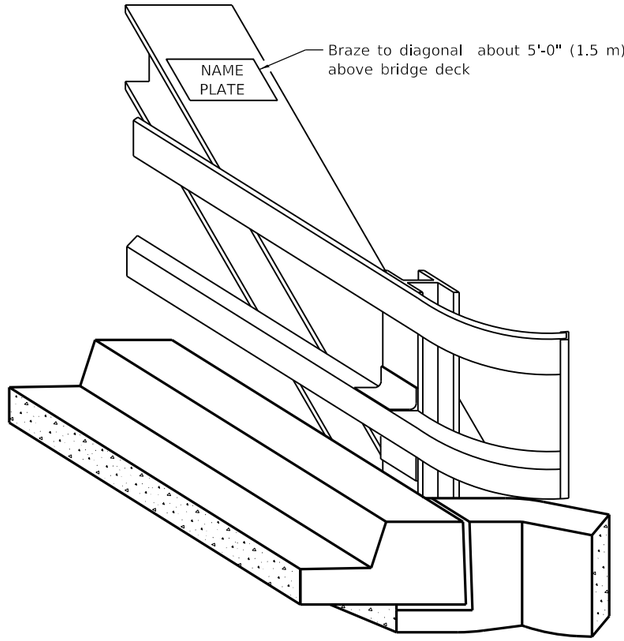

TRUSSES

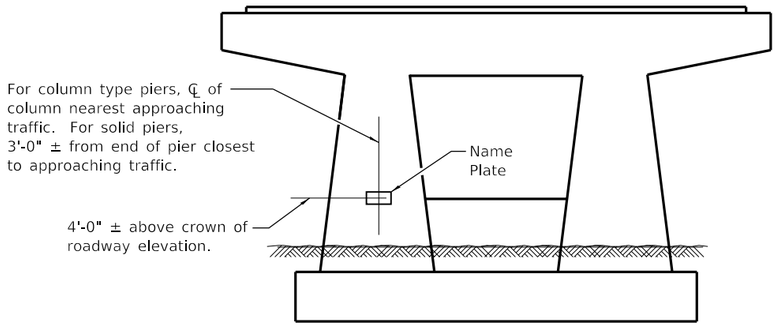

PIERS ON FAI ROUTES

GENERAL NOTES

On one-way traffic structures, place name plate on right side of approach end. On two-way traffic structures, place name plate on right side of approach end while looking in the direction of increasing stationing.

All dimensions are in inches (millimeters) unless otherwise shown.

Illinois Department of Transportation

APPROVED January 1, 2020
ENGINEER OF BRIDGES AND STRUCTURES

APPROVED January 1, 2020
ENGINEER OF DESIGN AND ENVIRONMENT

ISSUED 1-1-97

DATE	REVISIONS
1-1-20	Revised F-shape to constant slope
	parapet.
1-1-09	Switched units to English (metric).
	Added pier detail.
1-1-02	Removed Placing: note on sht. 2.
	Added braze note on sht. 1.

NAME PLATE FOR BRIDGES

STANDARD 515001-04

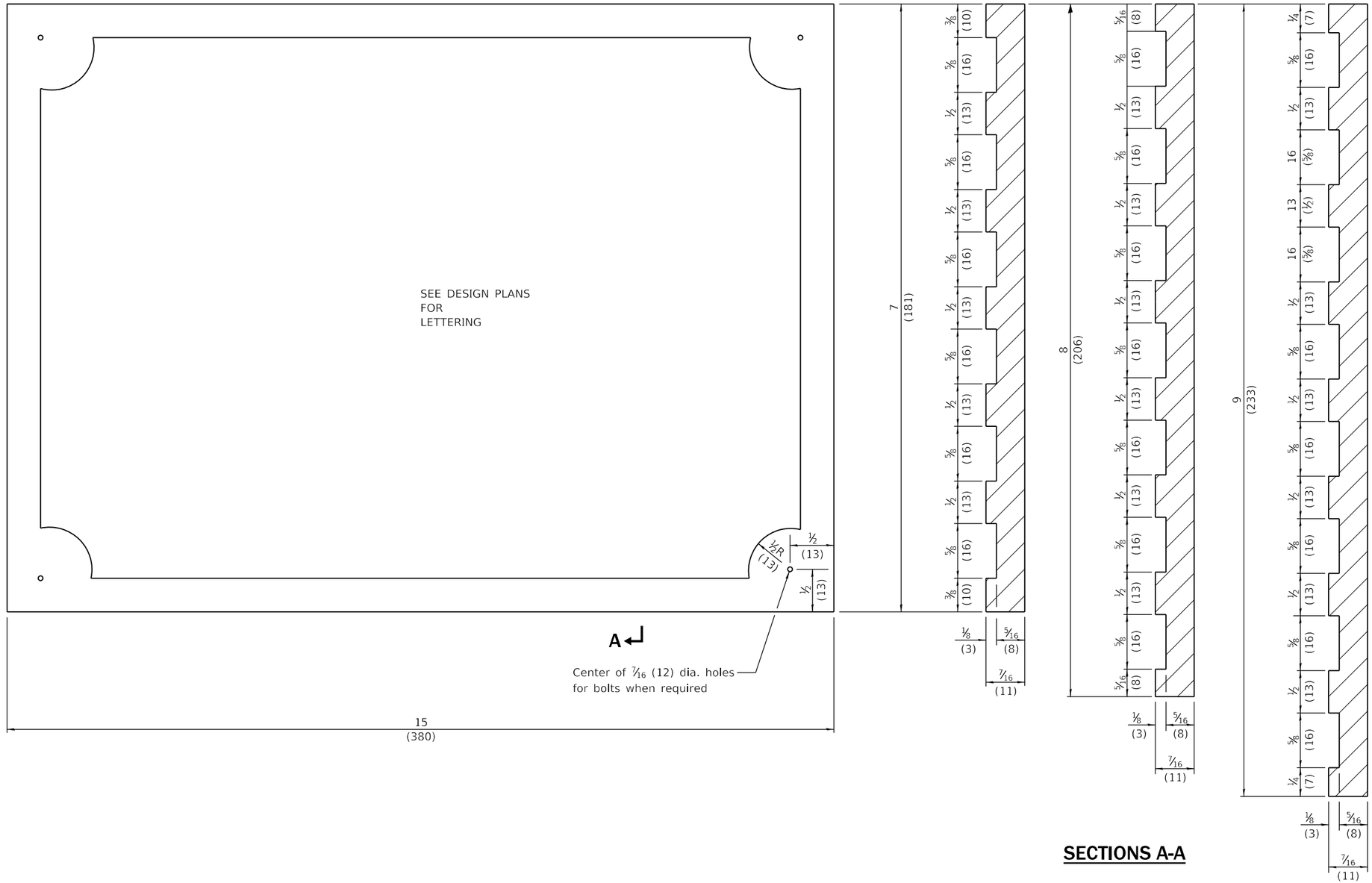

SECTIONS A-A

NOTE
Border and lettering:
Raised 1/8 (3), square cut and not tapered.

Illinois Department of Transportation

APPROVED January 1, 2020
ENGINEER OF BRIDGES AND STRUCTURES
APPROVED January 1, 2020
ENGINEER OF DESIGN AND ENVIRONMENT

ISSUED 1-1-97

NAME PLATE FOR BRIDGES

(Sheet 2 of 2)

STANDARD 515001-04

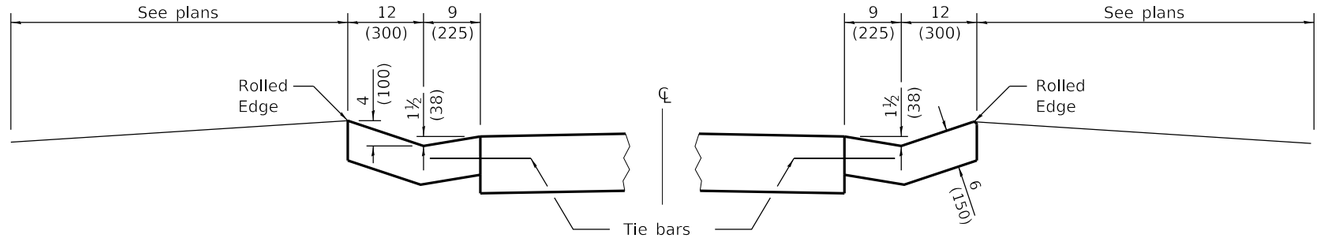

TYPE B GUTTER

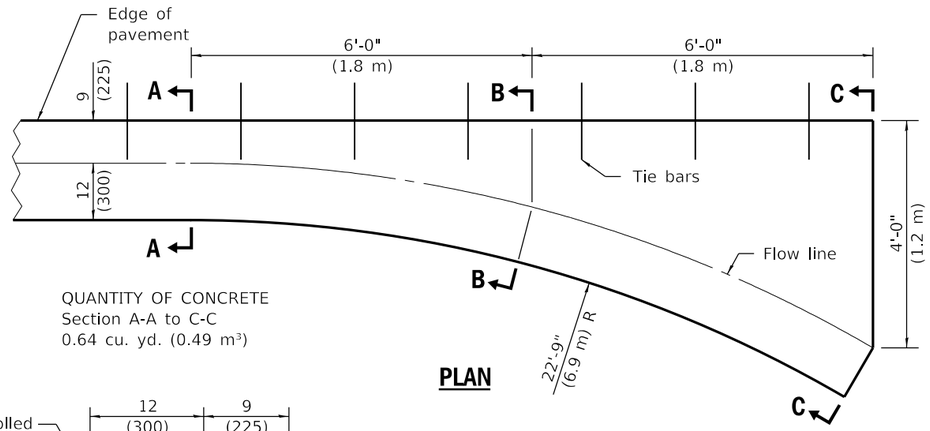

QUANTITY OF CONCRETE
Section A-A to C-C
0.64 cu. yd. (0.49 m³)

PLAN

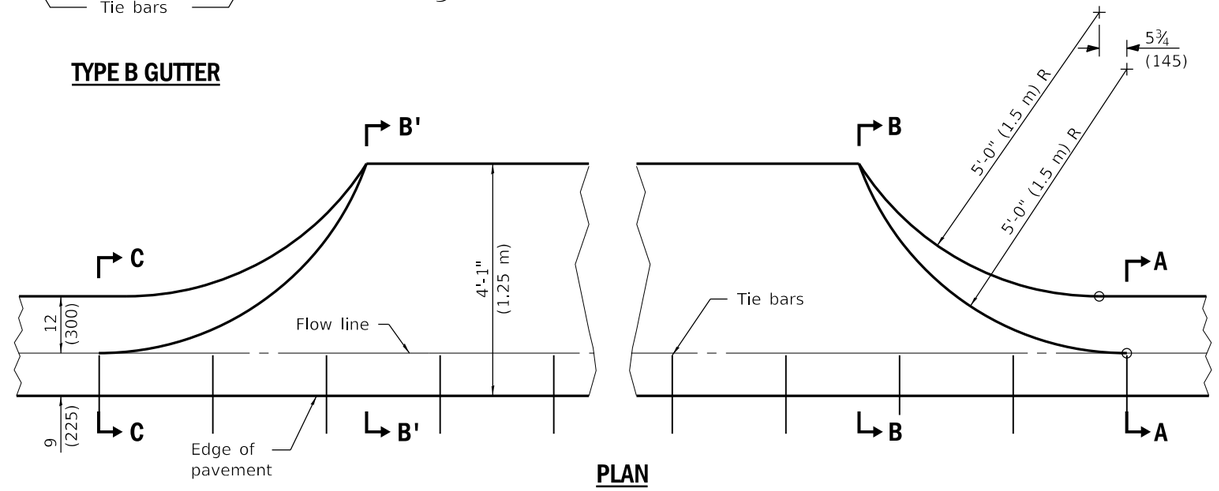

PLAN

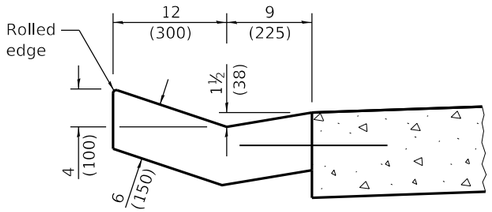

SECTION A-A

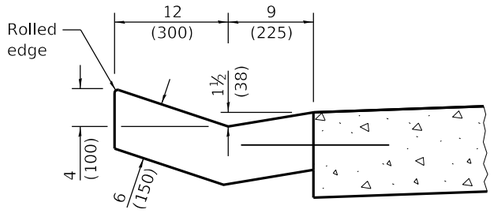

SECTIONS A-A & C-C

QUANTITY OF CONCRETE
Section B'-B' to B-B = 0.076 cu. yd./ft. (0.19 m³/m)
Section (C-C to B'-B') + (B-B to A-A) = 0.44 cu. yd. (0.34 m³)

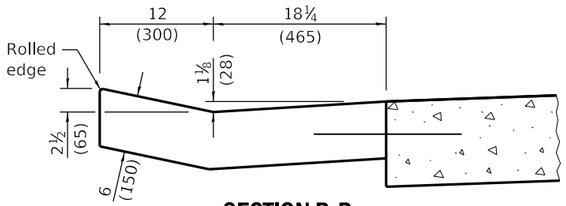

SECTION B-B

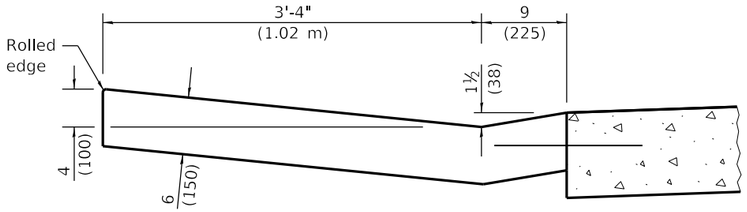

SECTIONS B-B & B'-B'

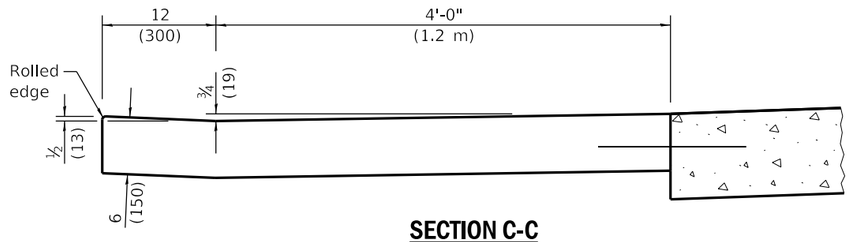

SECTION C-C

ENTRANCE

INLET

GENERAL NOTES

Gutter, gutter inlet, gutter outlet and gutter entrance shall be tied to the pavement in accordance with details for longitudinal construction joint shown on Standard 420001.

Two 1-1/4 x 18 (32 x 450) dowel bars shall be installed in all joints when the gutter is constructed adjacent to flexible pavement.

All dimensions are in inches (millimeters) unless otherwise shown.

Illinois Department of Transportation

PASSED January 1, 2018
Michael Brand
ENGINEER OF POLICY AND PROCEDURES

APPROVED January 1, 2018
Maureen M. Bolds
ENGINEER OF DESIGN AND ENVIRONMENT

ISSUED 1-1-97

DATE	REVISIONS
1-1-18	Deleted first General Note to avoid conflict with second General Note.
4-1-16	Changed terminology to 'welded wire reinforcement'.

TYPE B GUTTER (INLET, OUTLET & ENTRANCE)

(Sheet 1 of 2)

STANDARD 606201-04

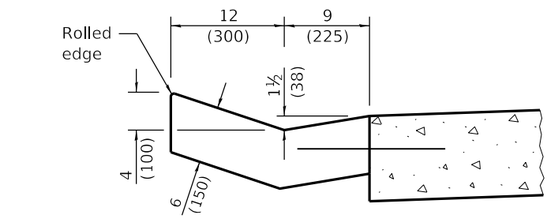

SECTION A-A

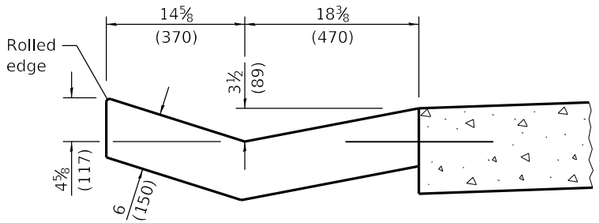

SECTION B-B

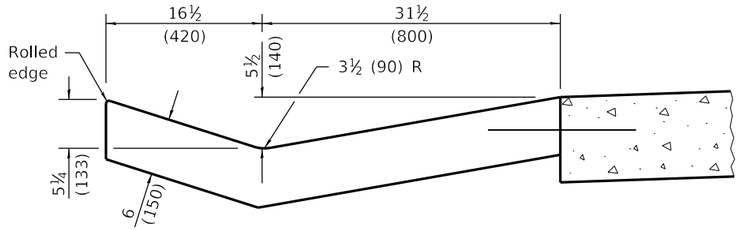

SECTION C-C

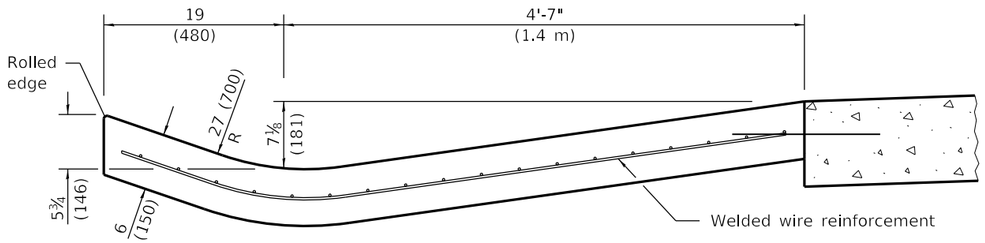

SECTION D-D

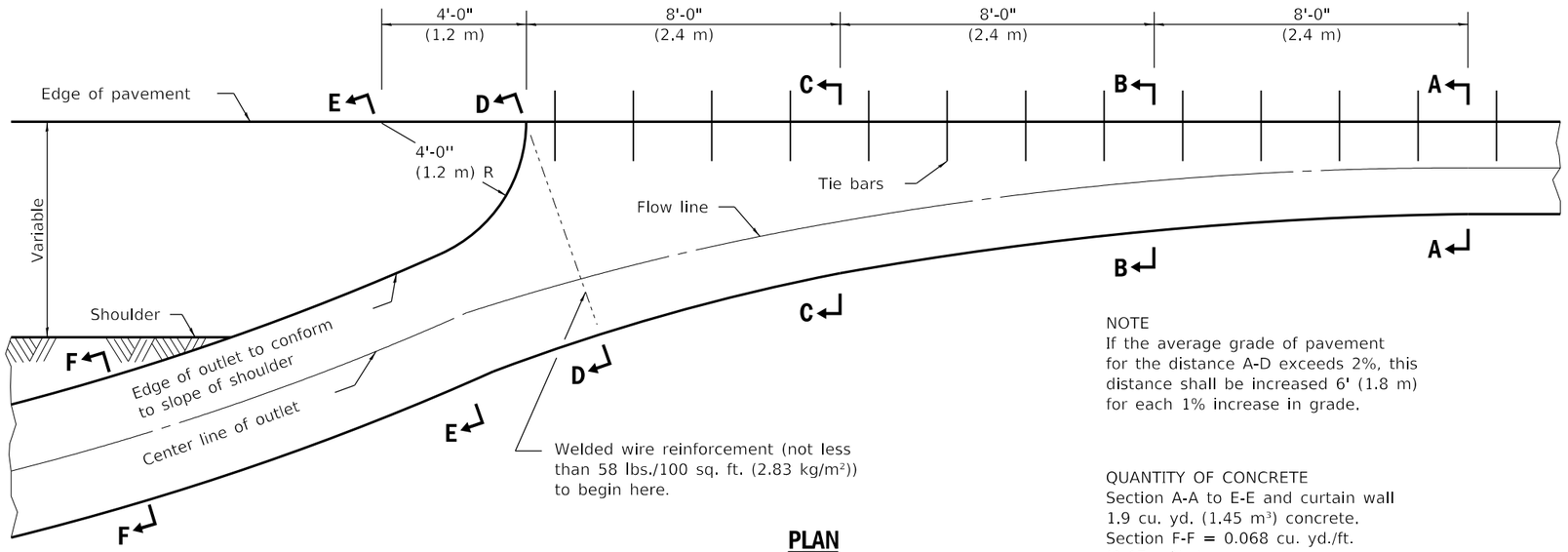

PLAN

NOTE
If the average grade of pavement for the distance A-D exceeds 2%, this distance shall be increased 6' (1.8 m) for each 1% increase in grade.

QUANTITY OF CONCRETE
Section A-A to E-E and curtain wall 1.9 cu. yd. (1.45 m³) concrete.
Section F-F = 0.068 cu. yd./ft. (0.17 m³/m).

OUTLET

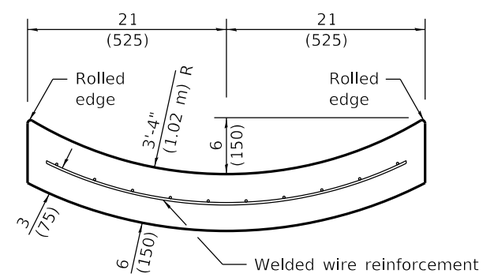

SECTION F-F

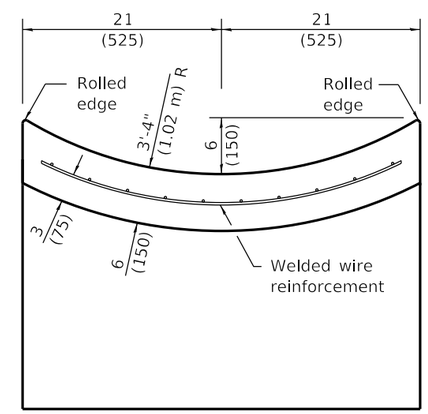

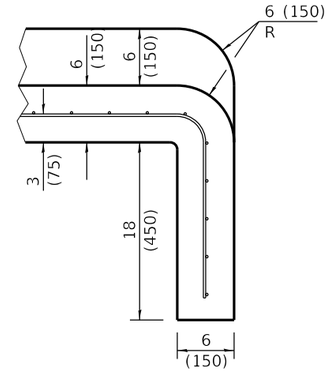

SECTIONS AT END OF OUTLET

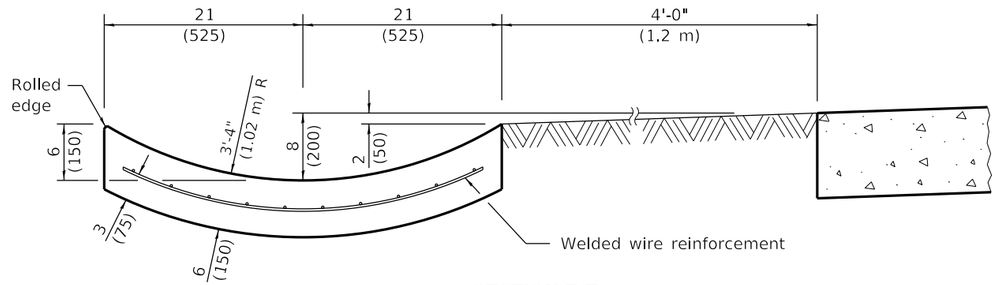

SECTION E-E

Illinois Department of Transportation

PASSED January 1, 2018
Michael Brand
ENGINEER OF POLICY AND PROCEDURES

APPROVED January 1, 2018
Maureen M. Bolds
ENGINEER OF DESIGN AND ENVIRONMENT

ISSUED 1-1-97

TYPE B GUTTER (INLET, OUTLET & ENTRANCE)

(Sheet 2 of 2)

STANDARD 606201-04

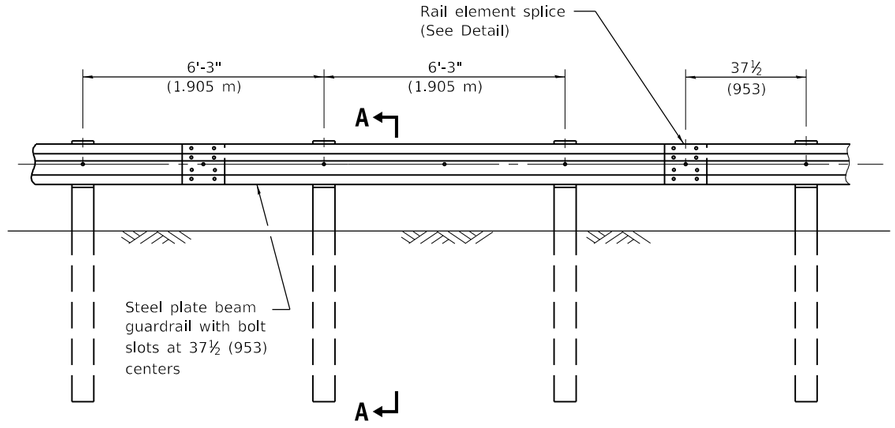

ELEVATION

TYPE A

6'-3" (1.905 m) Typical post spacing

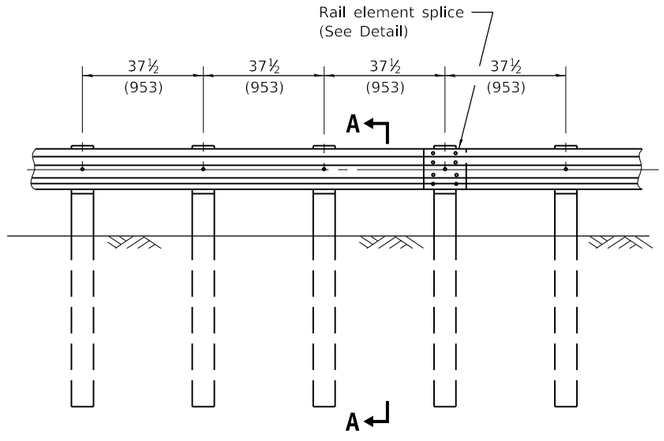

ELEVATION

TYPE B

37½ (953) Closed post spacing

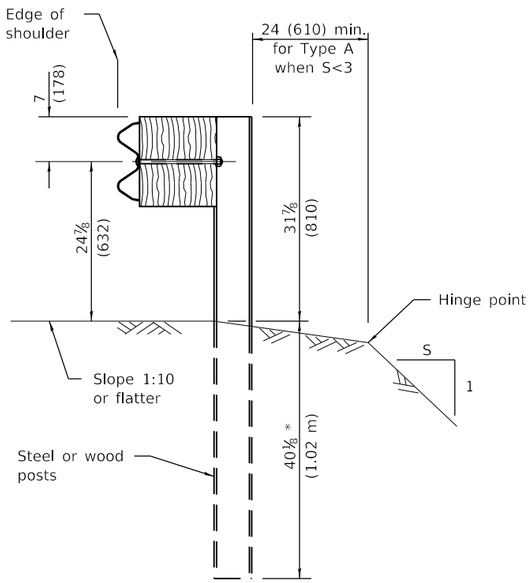

SECTION A-A

* When "S" is less than 3 and the distance from the back of post is less than 24 (610), the post shall be steel and the embedment shall be 76⅛ (1.93 m) and the minimum top of rail height shall be 31 (787).

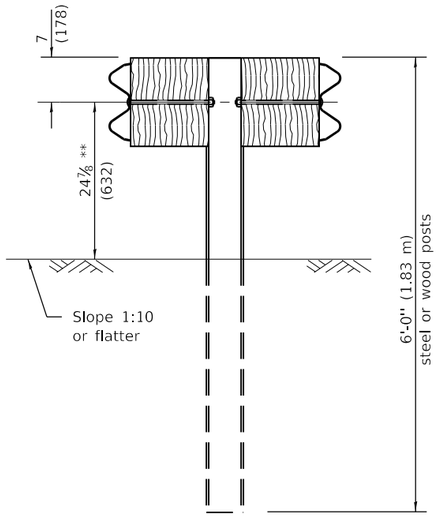

SECTION B-B

** When connecting Type D guardrail to an impact attenuator, adjust this dimension to match over a distance of 25'-0" (7.62 m) from point of connection if necessary.

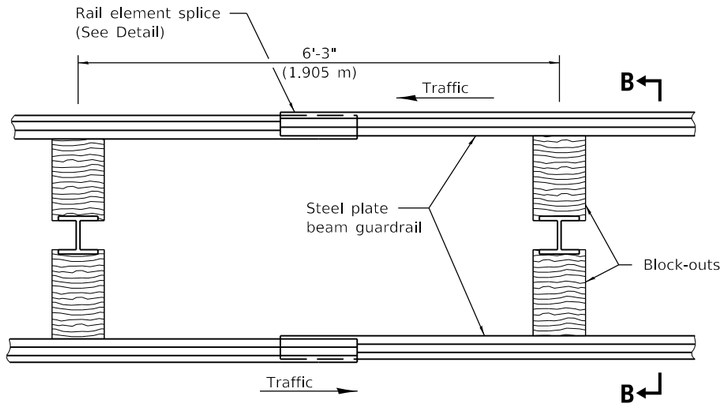

PLAN

TYPE D

Double steel plate beam guardrail
6'-3" (1.905 m) typical post spacing

GENERAL NOTES

All slope ratios are expressed as units of vertical displacement to units of horizontal displacement (V:H).

All dimensions are in inches (millimeters) unless otherwise shown.

Illinois Department of Transportation

APPROVED January 1, 2018
Michael Briand
ENGINEER OF POLICY AND PROCEDURES

APPROVED January 1, 2018
ENGINEER OF DESIGN AND ENVIRONMENT

ISSUED 1-1-97

DATE	REVISIONS
1-1-18	Revised steel post to have
	four holes in each flange.
1-1-17	Added detail for leave-out.
	Rev. 'D' to less than 6 (150)
	for guardrail behind curb.

STEEL PLATE BEAM GUARDRAIL

STANDARD 630001-12

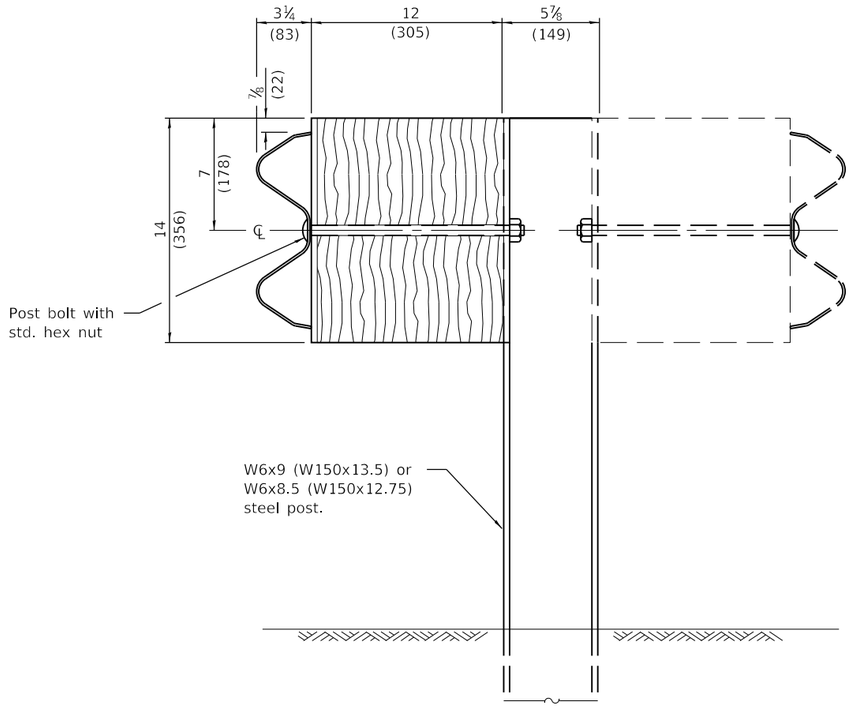

STEEL POST CONSTRUCTION

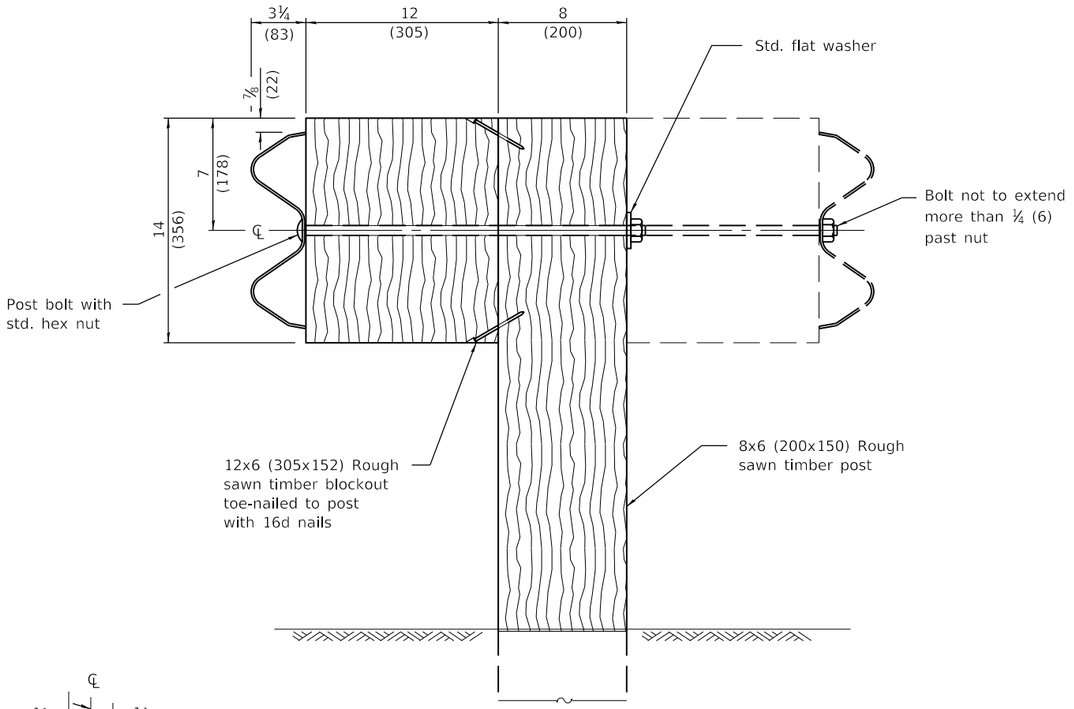

WOOD POST CONSTRUCTION

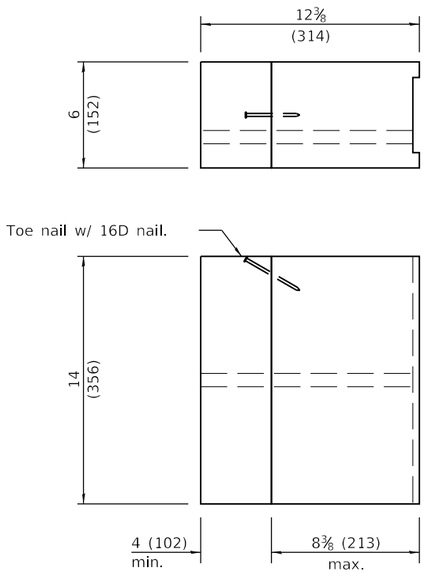

TWO-PIECE WOOD BLOCKOUT OPTION

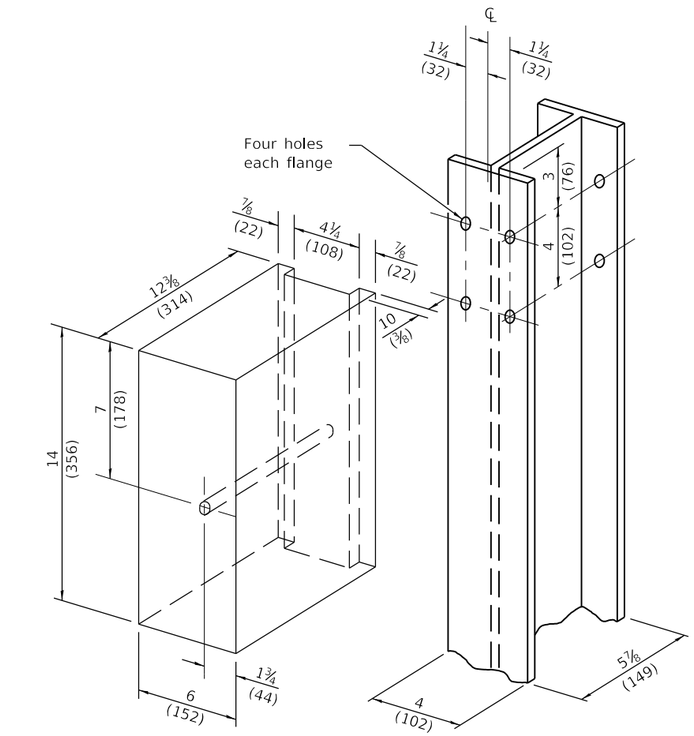

Note:
All holes ¾ (20) dia.

WOOD BLOCK-OUT AND STEEL POST DETAILS

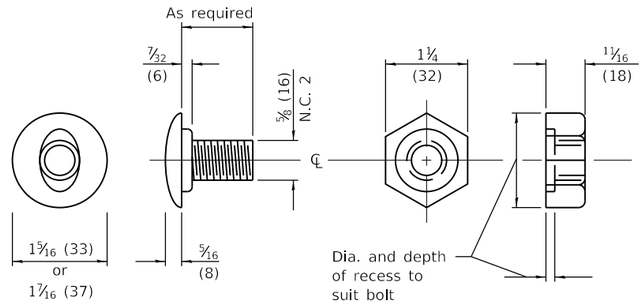

POST OR SPLICE BOLT & NUT

Illinois Department of Transportation

APPROVED January 1, 2018
Michael Brand
ENGINEER OF POLICY AND PROCEDURES

APPROVED January 1, 2018
Maureen M. Bolds
ENGINEER OF DESIGN AND ENVIRONMENT

ISSUED 1-1-97

STEEL PLATE BEAM GUARDRAIL

(Sheet 2 of 4)

STANDARD 630001-12

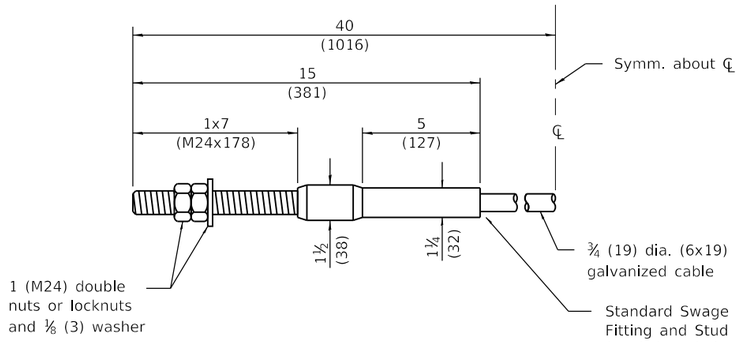

CABLE ASSEMBLY

(42,800 lbs. (190 kN) min. breaking strength)
Tighten to taut tension.

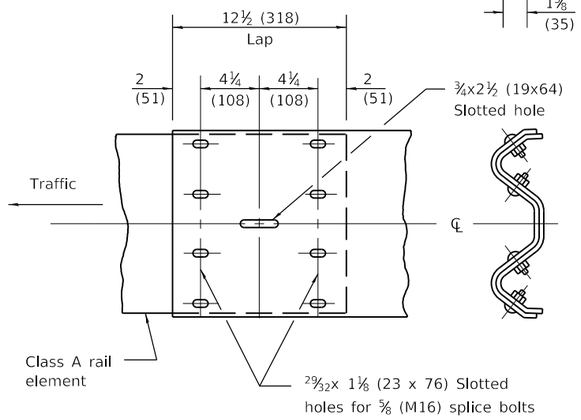

RAIL ELEMENT SPLICE

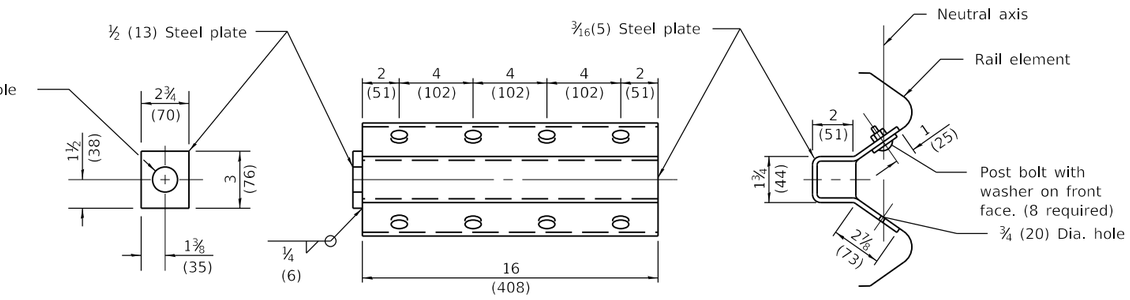

NOTE
Anchor plate T shall be used to attach cable assembly to guardrail when required on traffic barrier terminals.

ANCHOR PLATE T DETAILS

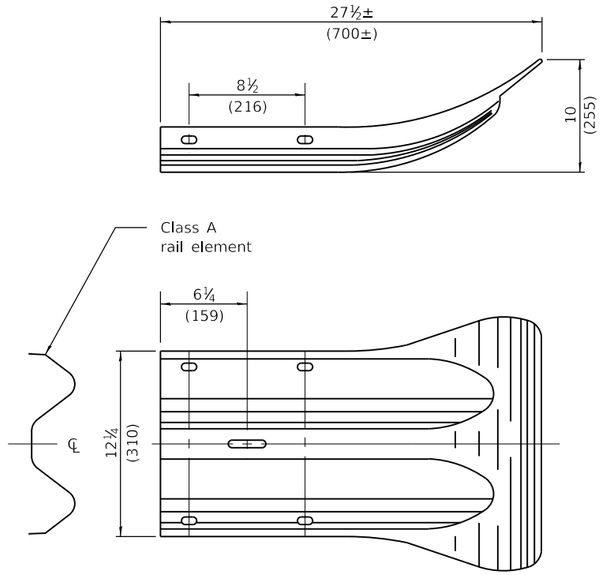

END SECTION

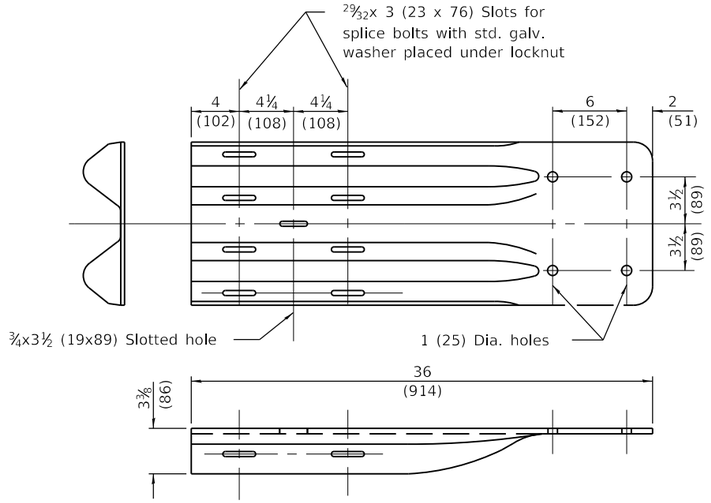

NOTE
When end shoe is attached to a bridge parapet which has an expansion joint, the bolts shall be provided with a locknut or double nut and shall be tightened only to a point that will allow guardrail movement.

The standard end shoe shall be attached to the concrete with pre-drilled or self-drilling anchor bolts. The anchor cone shall be set flush with the surface of the concrete.

Externally threaded studs protruding from the surface of the concrete will not be permitted.

END SHOE

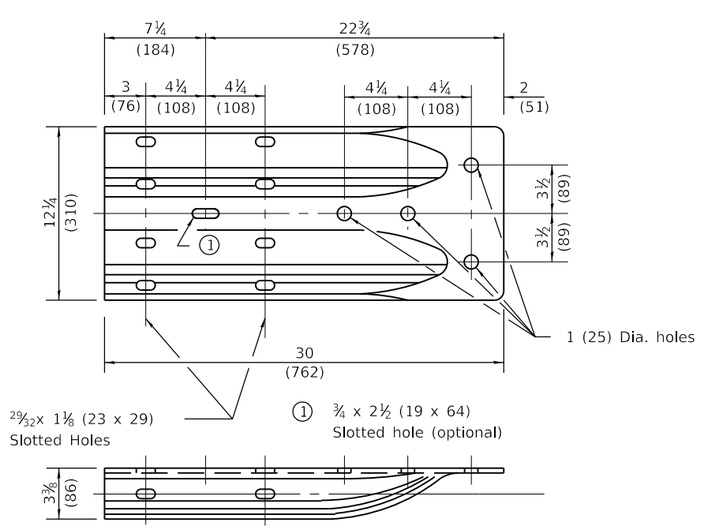

ALTERNATE END SHOE

Illinois Department of Transportation

APPROVED January 1, 2018
Michael Brand
ENGINEER OF POLICY AND PROCEDURES

APPROVED January 1, 2018
ENGINEER OF DESIGN AND ENVIRONMENT

ISSUED 1-1-97

STEEL PLATE BEAM GUARDRAIL

STANDARD 630001-12

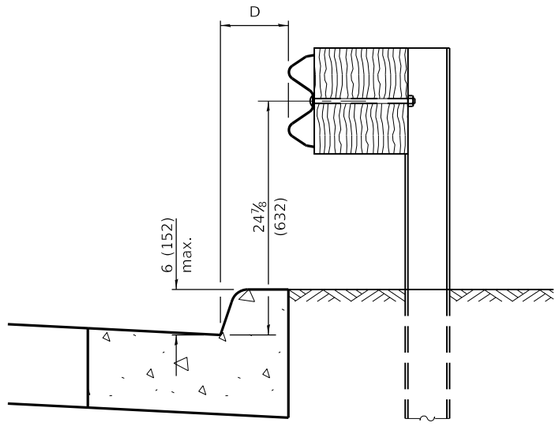

0 ≤ D < 6 (150 m)

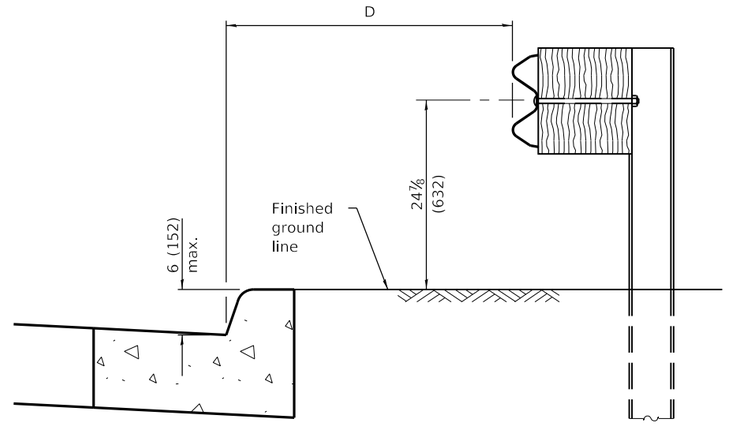

4'-0" (1.2 m) ≤ D ≤ 12'-0" (3.7 m)

GUARDRAIL PLACED BEHIND CURB

Note: 'D' shall not exceed 6 (152) for design speeds greater than 45 mph.

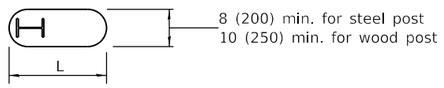

PLAN

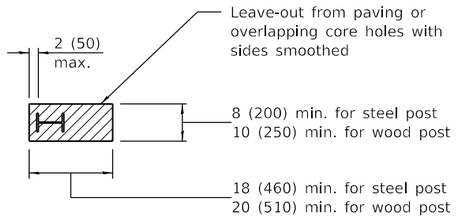

PLAN

V	W	L	
		Steel Post	Wood Post
0 - 6 (0 - 152)	24 (610)	21 (530)	23 (580)
> 6 - 18 (> 152 - 458)	18 (458)	14½ (368)	16½ (419)
> 18 - 31 (> 458 - 787)	12 (305)	8 (203)	10 (250)
> 31 - 40⅛ (> 787 - 1.02 m)	12 - 0 (305 - 0)	8 (203)	10 (250)

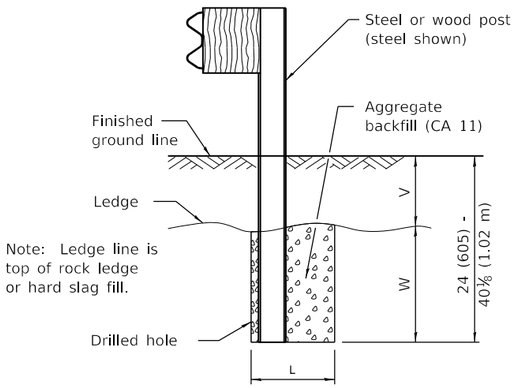

ELEVATION

FOOTING FOR POST WHEN IMPERVIOUS MATERIAL IS ENCOUNTERED

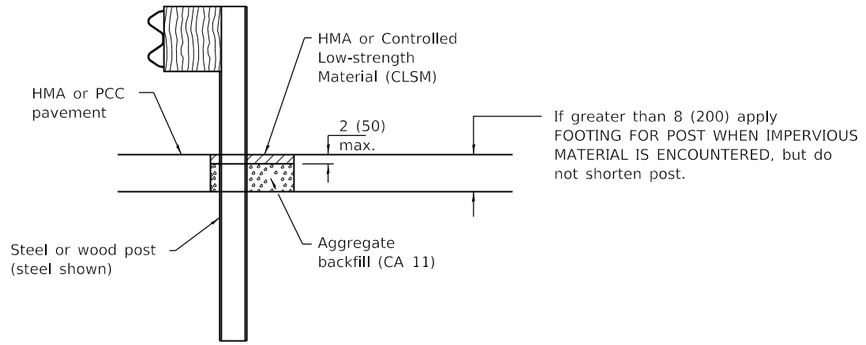

ELEVATION

LEAVE-OUT FOR POST WHEN PAVED MATERIAL IS ENCOUNTERED

Illinois Department of Transportation

APPROVED January 1, 2018
Michael Brand
ENGINEER OF POLICY AND PROCEDURES

APPROVED January 1, 2018
Maureen M. Addis
ENGINEER OF DESIGN AND ENVIRONMENT

ISSUED 1-1-97

STEEL PLATE BEAM GUARDRAIL

STANDARD 630001-12

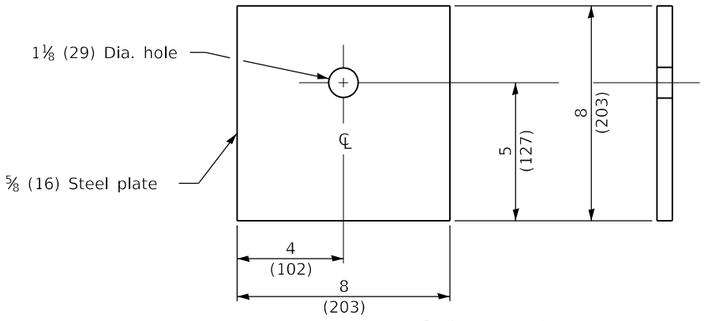

BEARING PLATE K

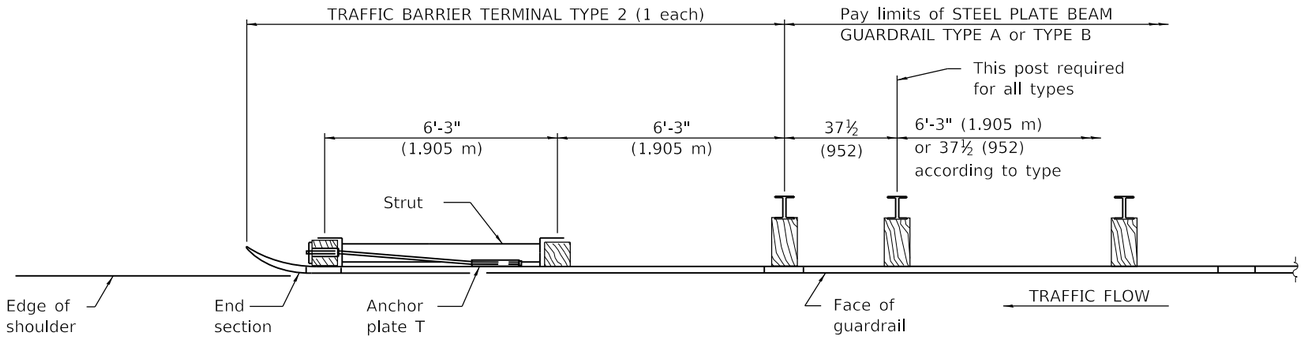

PLAN

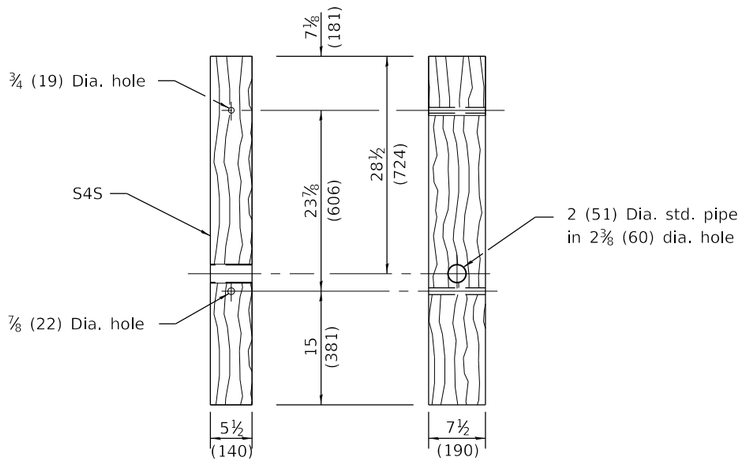

FRONT **SIDE**

WOOD POST

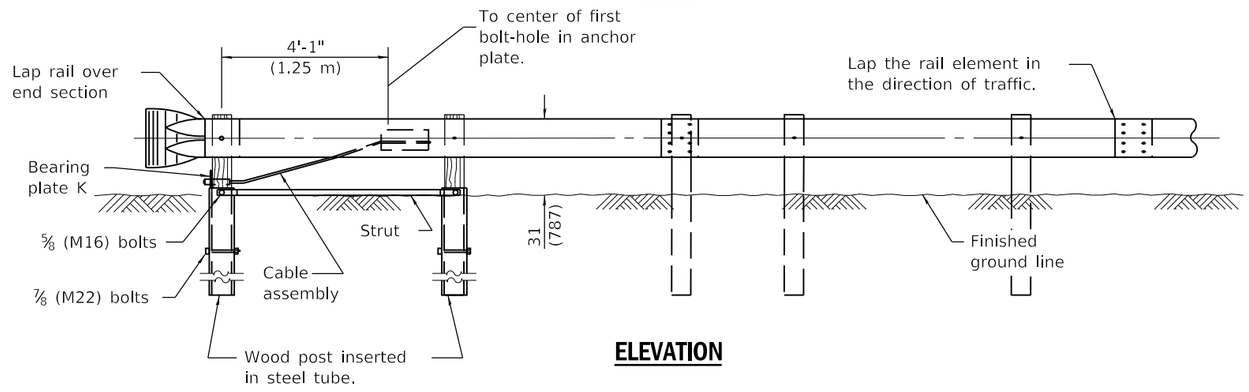

ELEVATION

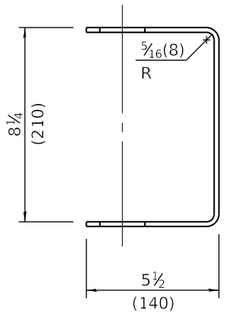

YOKE

3⁄16 (5) thick steel

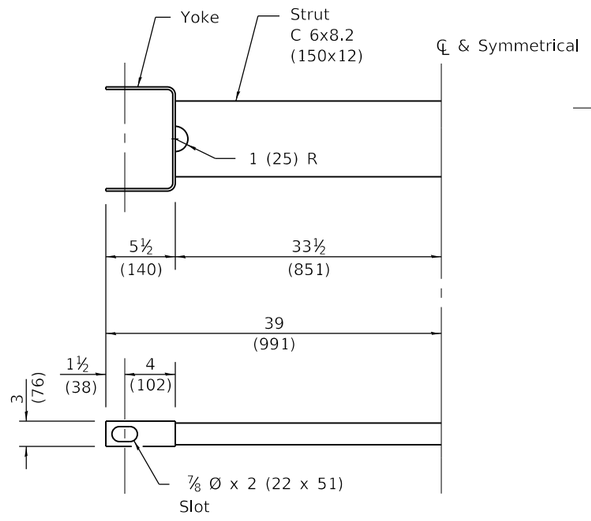

CABLE STRUT

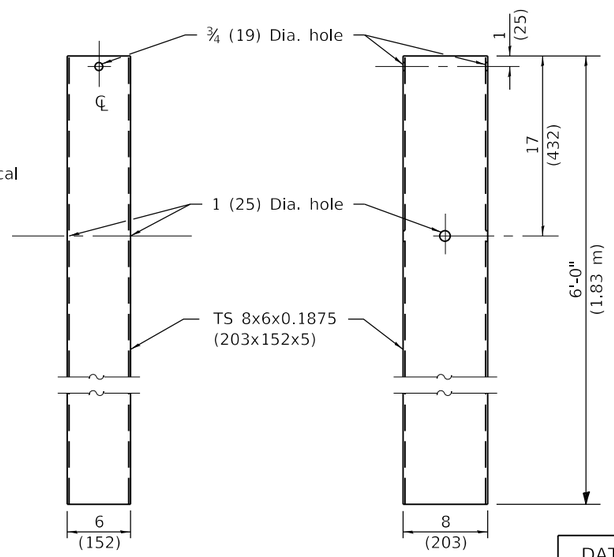

FRONT **SIDE**

STEEL TUBE

GENERAL NOTES

See Standard 630001 for details of guardrail not shown.

The bearing plate K shall be held in position by two eight penny nails driven into the post and bent over the top of the plate.

All dimensions are in inches (millimeters) unless otherwise shown.

Illinois Department of Transportation

PASSED January 1, 2017
Michael Brand
ENGINEER OF POLICY AND PROCEDURES

APPROVED January 1, 2017
Maureen M. Bolds
ENGINEER OF DESIGN AND ENVIRONMENT

ISSUED 1-1-97

DATE	REVISIONS
1-1-17	Revised wood post length and hole spacing.
1-1-13	Corrected metric dimension for BEARING PLATE K. Changed pipe dia. in wood post.

TRAFFIC BARRIER TERMINAL, TYPE 2

STANDARD 631011-10

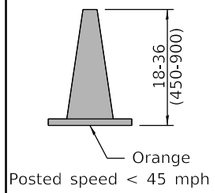

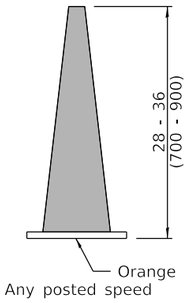

DAYTIME USE

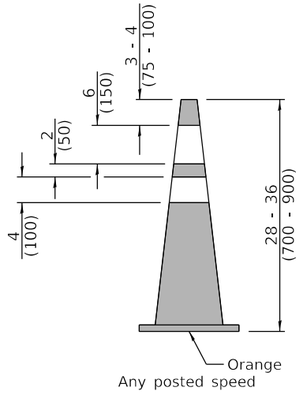

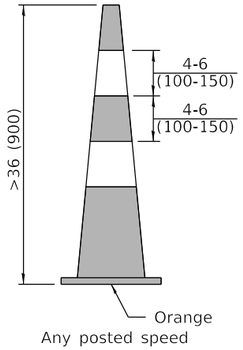

DAY OR NIGHTTIME USE

CONES

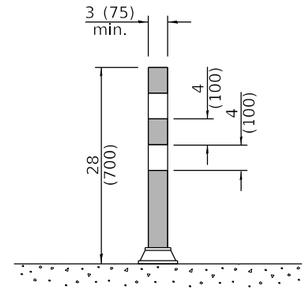

TUBULAR MARKER

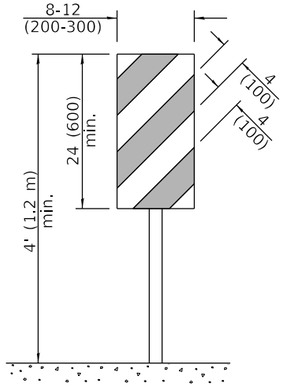

VERTICAL PANEL
POST MOUNTED

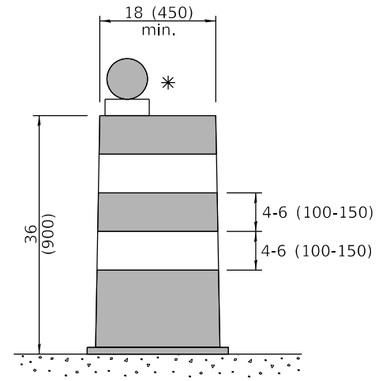

DRUM

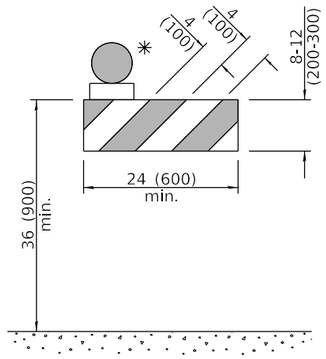

TYPE I BARRICADE

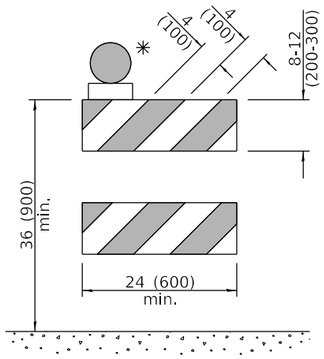

TYPE II BARRICADE

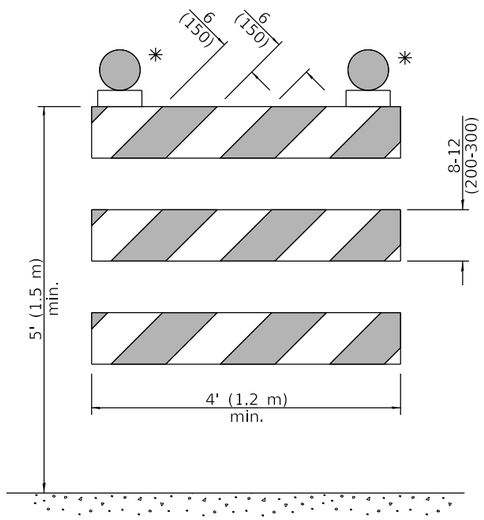

TYPE III BARRICADE

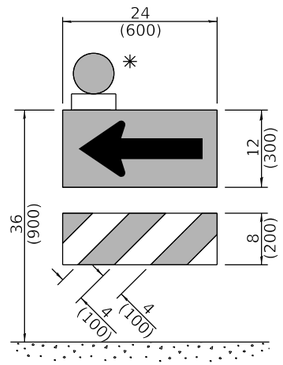

DIRECTION INDICATOR BARRICADE

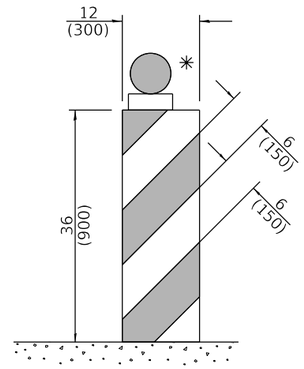

VERTICAL BARRICADE

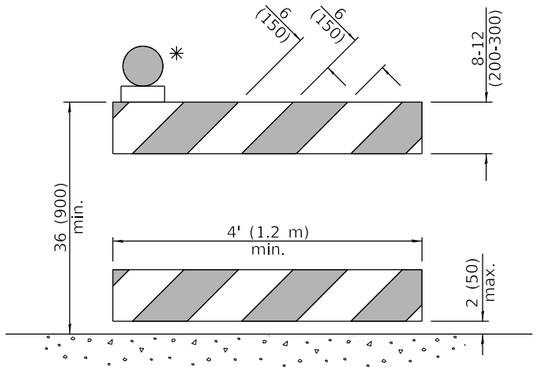

DETECTABLE PEDESTRIAN CHANNELIZING BARRICADE

✳ Warning lights (if required)

GENERAL NOTES

All heights shown shall be measured above the pavement surface.

All dimensions are in inches (millimeters) unless otherwise shown.

Illinois Department of Transportation

APPROVED January 1, 2019
ENGINEER OF SAFETY PROG. AND ENGINEERING

APPROVED January 1, 2019
ENGINEER OF DESIGN AND ENVIRONMENT

ISSUED 1-1-13

DATE	REVISIONS
1-1-19	Revised cone usage and
	added cones >36" (900 m) height.
1-1-18	Revised END WORK ZONE
	SPEED LIMIT sign from
	orange to white background.

TRAFFIC CONTROL DEVICES

(Sheet 1 of 3)

STANDARD 701901-08

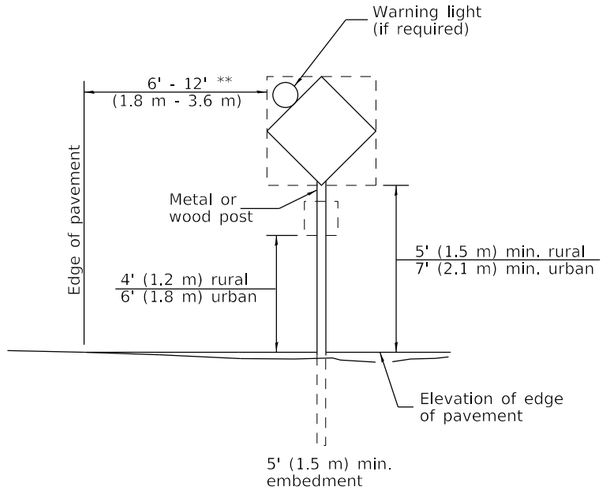

POST MOUNTED SIGNS

** When curb or paved shoulder are present this dimension shall be 24 (600) to the face of curb or 6' (1.8 m) to the outside edge of the paved shoulder.

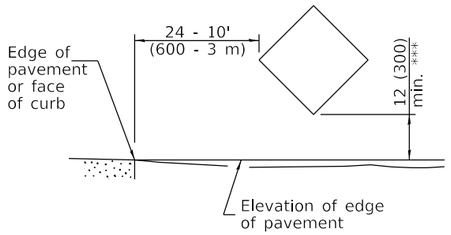

SIGNS ON TEMPORARY SUPPORTS

*** When work operations exceed four days, this dimension shall be 5' (1.5 m) min. If located behind other devices, the height shall be sufficient to be seen completely above the devices.

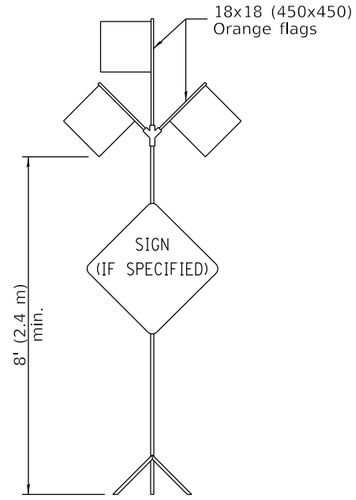

HIGH LEVEL WARNING DEVICE

G20-I104(0)-6036

G20-I105(0)-6024

This signing is required for all projects 2 miles (3200 m) or more in length.

ROAD CONSTRUCTION NEXT X MILES sign shall be placed 500' (150 m) in advance of project limits.

END CONSTRUCTION sign shall be erected at the end of the job unless another job is within 2 miles (3200 m).

Dual sign displays shall be utilized on multi-lane highways.

WORK LIMIT SIGNING

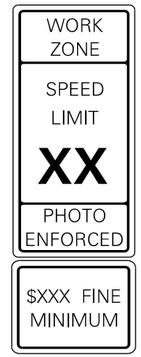

W21-III5(0)-3618

R2-1-3648

R10-I108p-3618 ****

R2-I106p-3618

Sign assembly as shown on Standards or as allowed by District Operations.

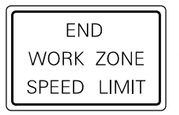

G20-I103-6036

This sign shall be used when the above sign assembly is used.

HIGHWAY CONSTRUCTION SPEED ZONE SIGNS

**** R10-I108p shall only be used along roadways under the juristiction of the State.

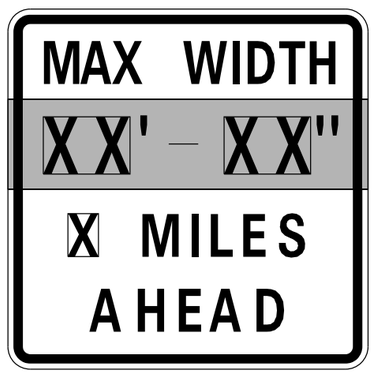

W12-I103-4848

WIDTH RESTRICTION SIGN

XX'-XX" width and X miles are variable.

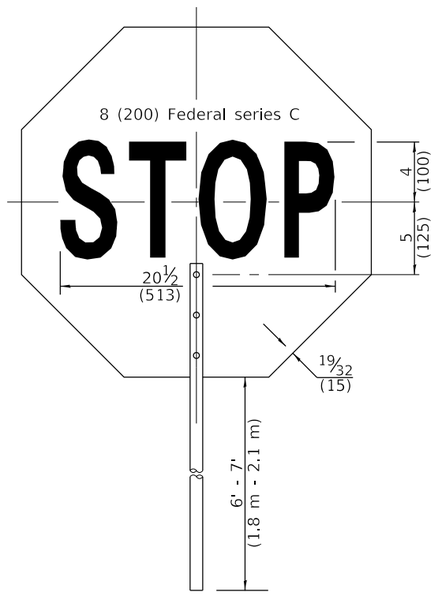

FRONT SIDE

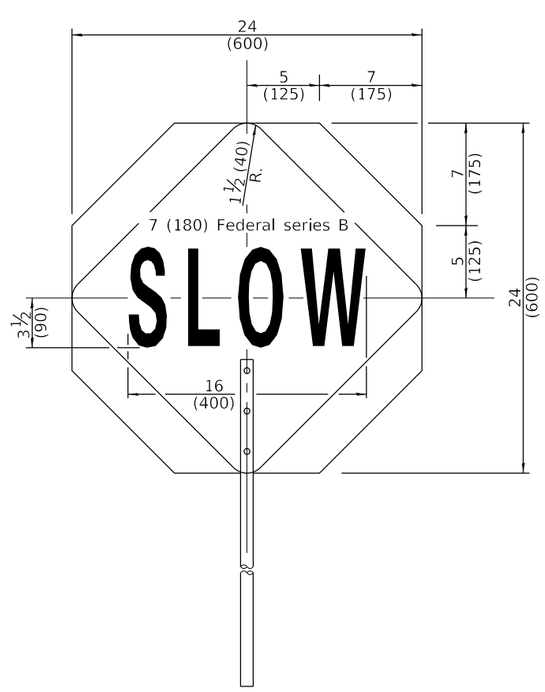

REVERSE SIDE

FLAGGER TRAFFIC CONTROL SIGN

Illinois Department of Transportation

APPROVED January 1, 2019
ENGINEER OF SAFETY PROG. AND ENGINEERING

APPROVED January 1, 2019
ENGINEER OF DESIGN AND ENVIRONMENT

ISSUED 1-1-13

TRAFFIC CONTROL DEVICES

STANDARD 701901-08

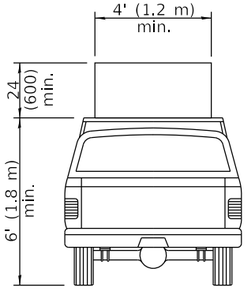

**TYPE A
ROOF
MOUNTED**

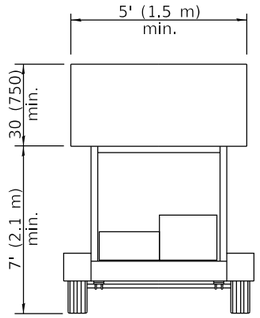

**TYPE B
ROOF OR TRAILER
MOUNTED**

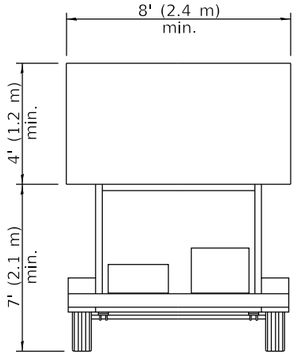

**TYPE C
TRAILER
MOUNTED**

ARROW BOARDS

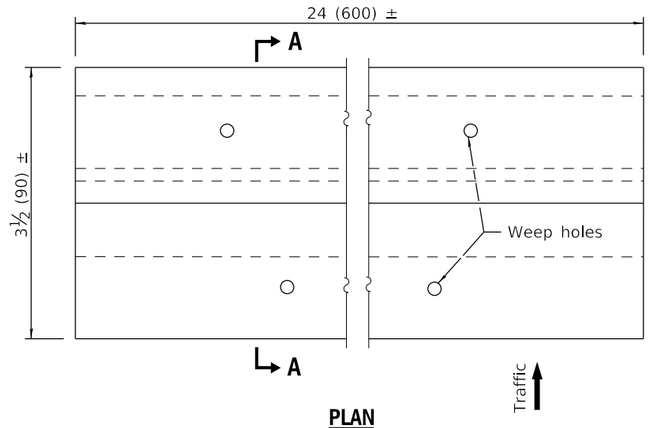

PLAN

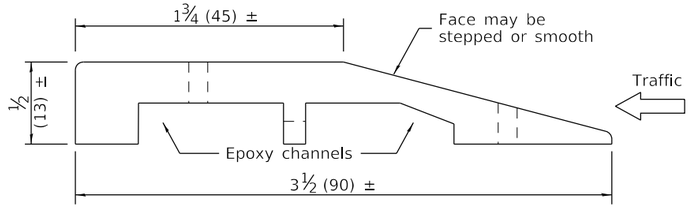

SECTION A-A

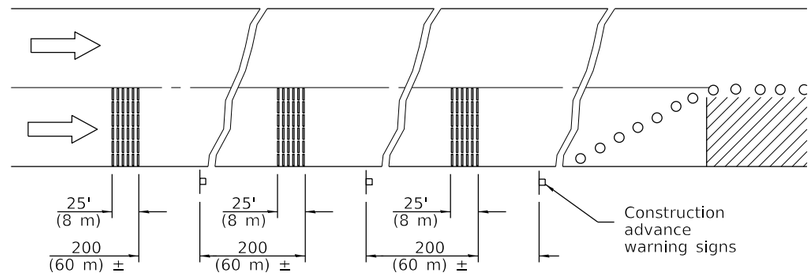

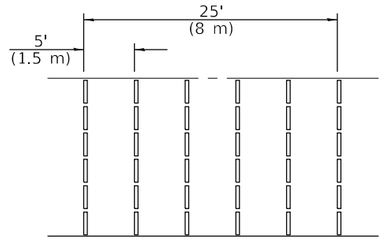

TYPICAL INSTALLATION

TEMPORARY RUMBLE STRIPS

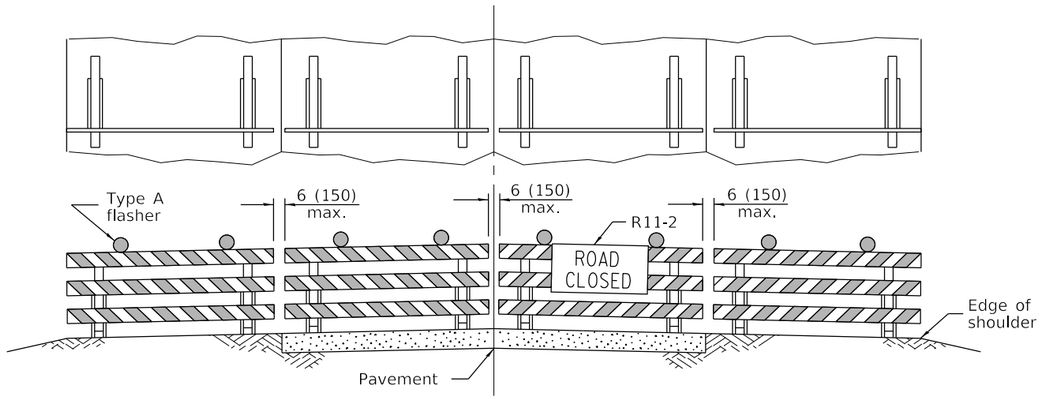

ROAD CLOSED TO ALL TRAFFIC

Reflectorized striping may be omitted on the back side of the barricades. If a Type III barricade with an attached sign panel which meets NCHRP 350 is not available, the sign may be mounted on an NCHRP 350 temporary sign support directly in front of the barricade.

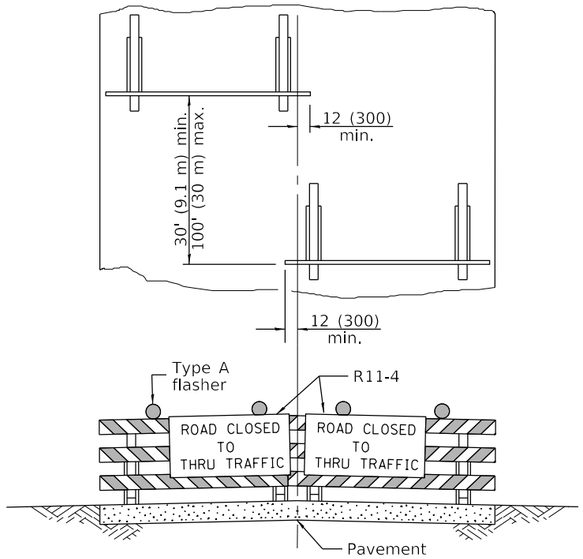

ROAD CLOSED TO THRU TRAFFIC

Reflectorized striping shall appear on both sides of the barricades. If a Type III barricade with an attached sign panel which meets NCHRP 350 is not available, the signs may be mounted on NCHRP 350 temporary sign supports directly in front of the barricade.

TYPICAL APPLICATIONS OF TYPE III BARRICADES CLOSING A ROAD

Illinois Department of Transportation

APPROVED January 1, 2019
ENGINEER OF SAFETY PROG. AND ENGINEERING

APPROVED January 1, 2019
ENGINEER OF DESIGN AND ENVIRONMENT

ISSUED 1-1-13

TRAFFIC CONTROL DEVICES

(Sheet 3 of 3)

STANDARD 701901-08

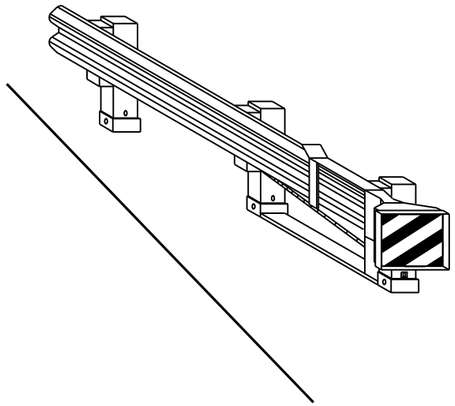

CASE I

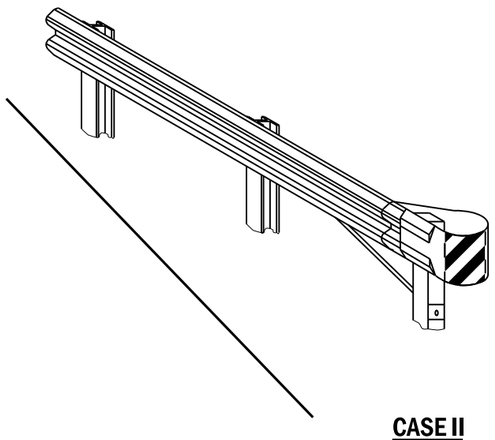

CASE II

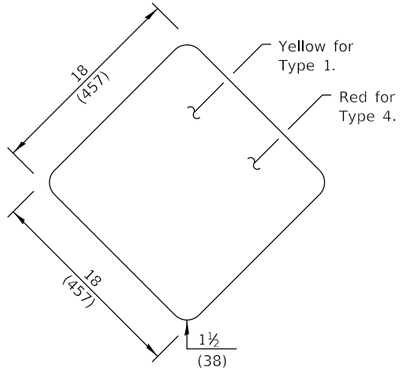

TYPE 1 OR TYPE 4

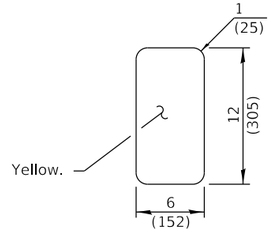

TYPE 2

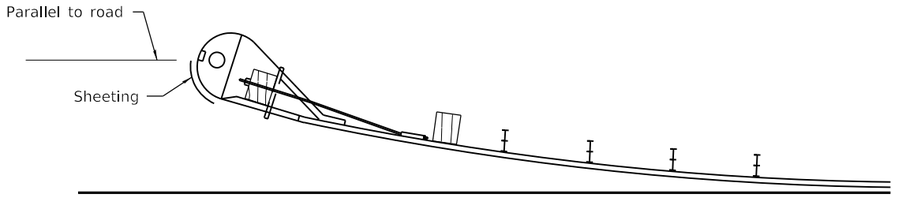

SHEETING POSITION: CASE II

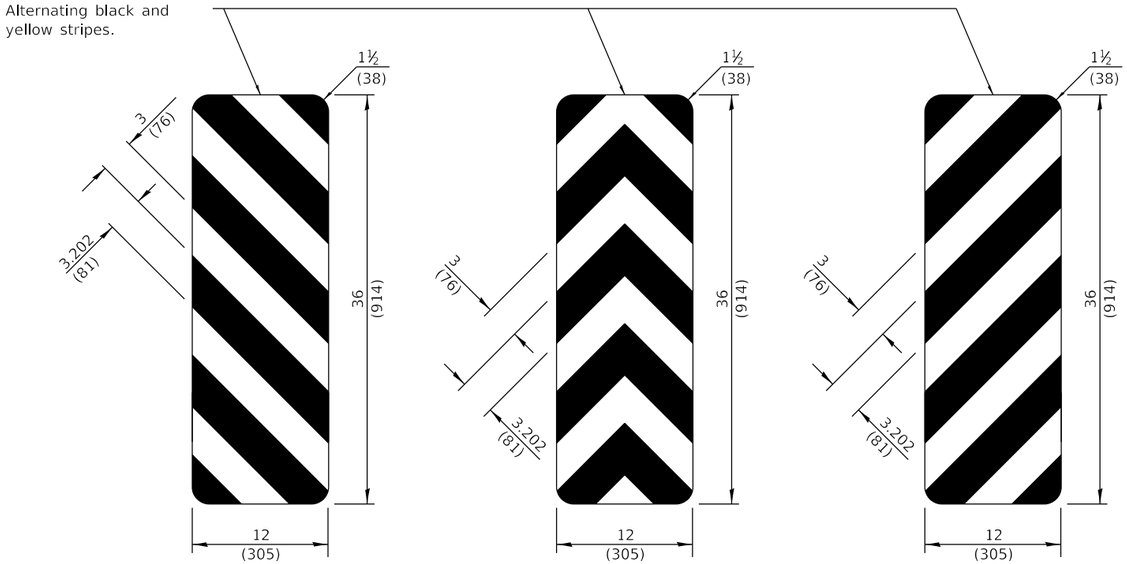

TYPE 3

OBJECT MARKER DETAILS

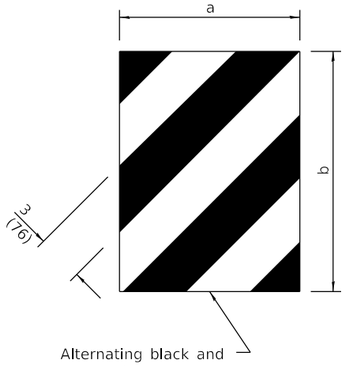

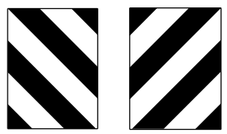

DIMENSION	CASE I	CASE II
a	*	18 (450)
b	*	16 (406)

DIRECT APPLIED

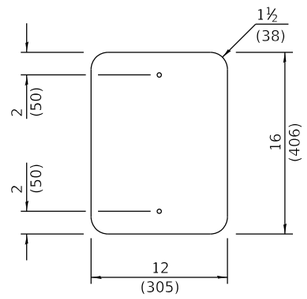

POST MOUNTED

TERMINAL MARKER DETAILS

Color: Black / Yellow reflectorized

* The width and height (a, b) of the terminal marker shall be within approximately 1 (25) of the outer edge of the terminal end.

GENERAL NOTES

See detail on Standard 729001 for mounting markers to posts.

All dimensions are in inches (millimeters) unless otherwise shown.

Illinois Department of Transportation

PASSED January 1, 2017

ENGINEER OF OPERATIONS

APPROVED January 1, 2017

ENGINEER OF DESIGN AND ENVIRONMENT

ISSUED 1-1-2016

DATE	REVISIONS
1-1-17	Omitted minimum reflective
	area requirement for
	terminal marker.
4-1-16	Renumbered standard from
	635006.

OBJECT AND TERMINAL MARKERS

STANDARD 725001-01

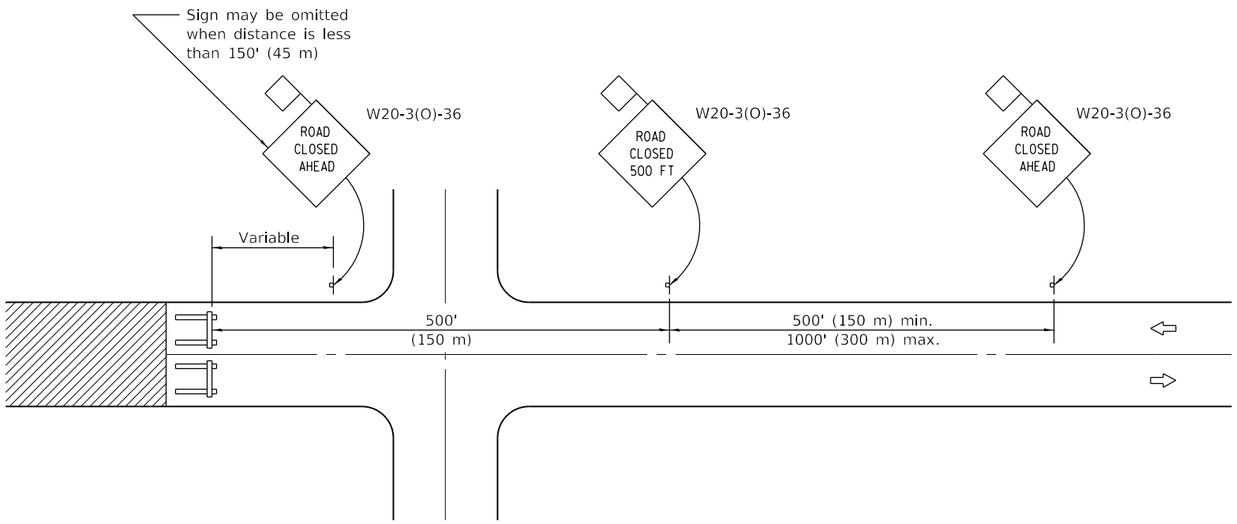

CONDITION I

When distance from closure to crossroad is less than 1500' (450 m)

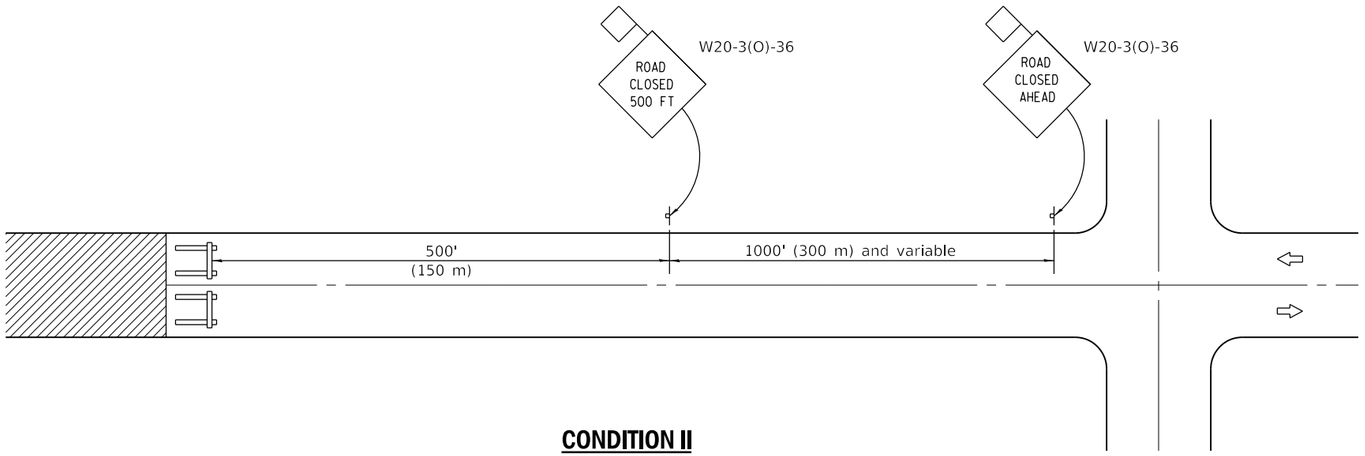

CONDITION II

When distance from closure to crossroad is greater than 1500' (450 m)

SYMBOLS

Work area

Type III Barricade

Sign with 18x18 (450x450) min. orange flag attached

GENERAL NOTES

Type III Barricades and R11-2-4830 signs shall be positioned as shown in "Road Closed To All Traffic" detail on Highway Standard 701901.

Two Type A Low Intensity Flashing Lights shall be used on each approach in advance of the work area during hours of darkness. One light shall be installed above the barricades and the other above the first advance warning sign.

All warning signs shall have minimum dimensions of 36 x 36 (900 x 900) and have a black legend on an orange reflectorized background.

When fluorescent signs are used, orange flags are not required.

Longitudinal dimensions may be adjusted to fit field conditions.

When the distance between the barricade and the intersection is between 1500' (450 m) and 2000' (600 m), the advance sign shall be placed at the intersection. When the distance between the barricade and the intersection is over 2000' (600 m), an additional sign shall be placed at the intersection. The additional sign shall give the distance to the barricade in miles or fractions of a mile.

All dimensions are in inches (millimeters) unless otherwise shown.

Illinois Department of Transportation

PASSED January 1, 2012
ENGINEER OF LOCAL ROADS AND STREETS
APPROVED January 1, 2012
ENGINEER OF DESIGN AND ENVIRONMENT

ISSUED 1-1-97

DATE	REVISIONS
1-1-12	Omitted two notes from
	GENERAL NOTES.
1-1-09	Switched units to
	English (metric).

TYPICAL APPLICATION OF TRAFFIC CONTROL DEVICES FOR CONSTRUCTION ON RURAL LOCAL HIGHWAYS

STANDARD B.L.R. 21-9

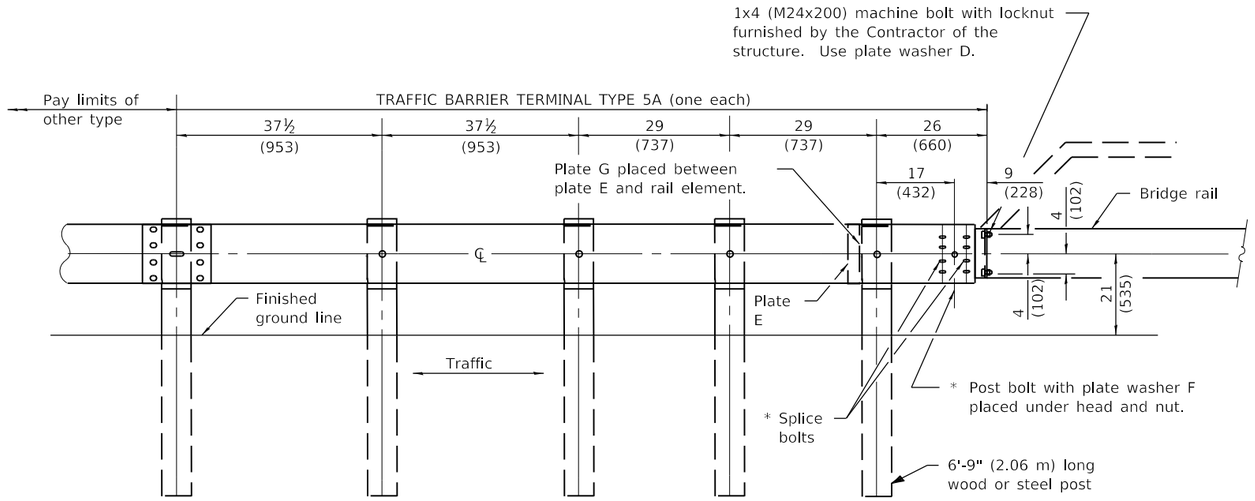

TYPE 5A - STEEL BRIDGE RAIL

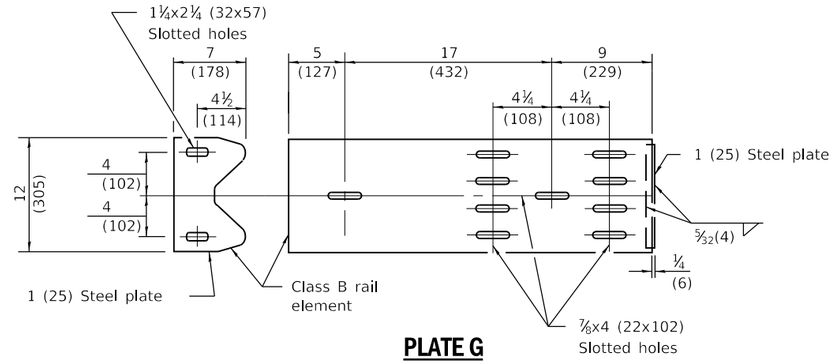

PLATE G

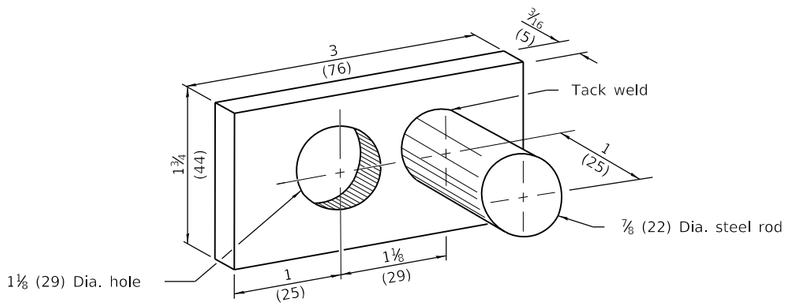

PLATE WASHER D

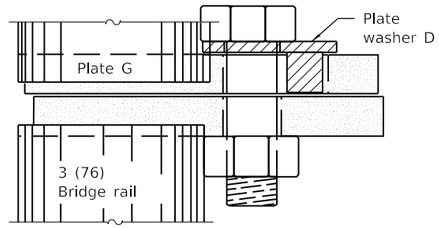

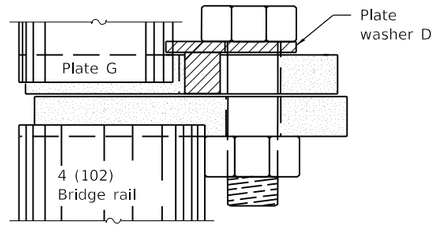

PLACEMENT OF PLATE WASHER D

(PLAN)

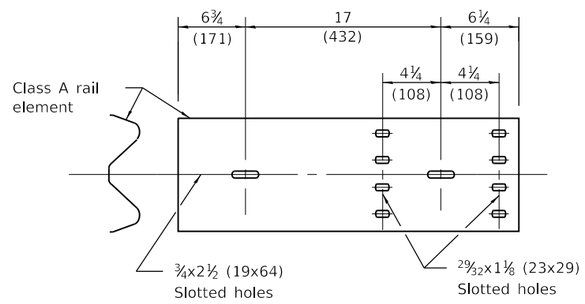

PLATE E

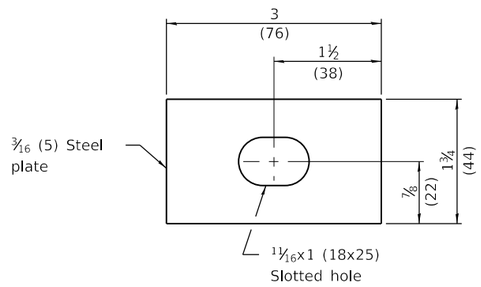

PLATE WASHER F

GENERAL NOTES

See Standard B.L.R. 26 for details of guardrail not shown.

Install plate washer D so the 1 (25) projection fills the remainder of the slotted holes in the 1 (25) end plate on plate G after the 1 (M24) dia. bolts are in place.

When an expansion joint exists below the connector, bolts shall be provided with a locknut or double nuts and shall be tightened only to a point that will allow plate G to be free to move.

The face of the guardrail shall be installed flush with the face of the bridge rail.

When this terminal is used with Standard 630001, the guardrail shall transition down to the height of the terminal.

All dimensions are in inches (millimeters) unless otherwise shown.

Illinois Department of Transportation

PASSED January 1, 2009
ENGINEER OF LOCAL ROADS AND STREETS
APPROVED January 1, 2009
ENGINEER OF DESIGN AND ENVIRONMENT

ISSUED 1-1-08

DATE	REVISIONS
1-1-09	Switched units to
	English (metric).
1-1-08	New Standard. Was part
	of Std. 631026 prior to
	January 1, 2007.

TRAFFIC BARRIER TERMINAL TYPE 5A

STANDARD B.L.R. 27-1