Tazewell County Highway Department

AUTHORIZATION TO BID FORM

Addenda will be published to our Bid Letting page in the same manner as the plans and specifications. It is the sole responsibility of the plan holders to periodically check the website for plan addenda.

ALL BIDDERS PLANNING TO PLACE A BID MUST FILL OUT THIS FORM TO BE AUTHORIZED TO BID.

- This form must be completed, signed and either faxed to (309) 925-5533 or emailed to jsciortino@tazewell-il.gov.
- Failure to submit this completed form will result in the bid not being accepted.
- Contractors may verify we have received their Authorization to Bid form by checking the **Plan Holders List** found under the corresponding letting date.
- If an email address is provided, a Notice of Addenda will be sent when updates are available.
- Bid results are typically posted by noon on the day of the letting and are preliminary until approved by the County Board on the last Wednesday of the month.

Company Name:	
Address:	
Phone:	
Fax:	
Email:	
Bid Letting Date:	

Projects Intending to Bid on:

Section Number:	Description:

Tazewell County Highway Department
21308 Illinois Route 9
Tremont, IL 61568
p: (309) 925-5532 • f: (309) 925-5533 • jsciortino@tazewell-il.gov

Illinois Department of Transportation

Local Public Agency Material Proposal or Deliver & Install Proposal

Proposal Submitted By:

Contractor's Name

Contractor's Address | City | State | Zip Code

STATE OF ILLINOIS

Local Public Agency	County	Section Number
Boynton Road District	Tazewell	22-01000-01-GM

Street Name/Road Name	Type of Funds
Various Routes	Township MFT & N-MFT Funds

+RB1

☐ Material proposal ☒ Deliver and Install Proposal ☐ Plans

For a County and Road District Project

Submitted/Approved

Highway Commissioner Signature: Brian Eeten BCS — Date: 3/25/22

Submitted/Approved

County Engineer/Superintendent of Highways: [signature] Acting — Date: 1 Apr 2022

For a Municipal Project

Submitted/Approved/Passed

Signature | Date

Official Title

Department of Transportation

Released for bid based on limited review

Regional Engineer Signature: Kenneth A. Garnett SA — Date: 4/27/2022

Note: All proposal documents, including Proposal Guaranty Checks or Proposal Bid Bonds, should be stapled together to prevent loss when bids are processed.

Local Public Agency	County	Section Number
Boynton Road District	Tazewell	22-01000-01-GM

NOTICE TO BIDDERS

Sealed proposals for the project described below will be received at the office of the Tazewell County Engineer,
Name of Office

21308 Illinois Route 9 Tremont, Illinois 61568 until 1:30 PM on 05/17/22 .
Address Time Date

1. Plans and proposal forms will be available in the office of

Tazewell County Engineer
21308 Illinois Route 9, Tremont, Illinois 61568

2. ☒ Prequalification

If checked, the 2 low bidders must file within 24 hours after the letting an "Affidavit of Availability" (Form BC 57) in duplicate, showing all uncompleted contracts awarded to them and all low bids pending award for Federal, State, County, Municipal and private work. One original shall be filed with the Awarding Authority and one original with the IDOT District Office.

3. The Awarding Authority reserves the right to waive technicalities and to reject any or all proposals as provided in BLRS Special Provision for Bidding Requirements and Conditions for Material/Deliver and Install Proposals.

4. A proposal guaranty in the proper amount, as specified in the BLRS Special Provision for Bidding Requirements and Conditions for Material/Deliver and Install Proposals, will be required. See the attached Special Provisions for specific instructions for proposal guaranty for this proposal packet.

5. The successful bidder at the time of execution of the contract will be required to deposit a contract bond of proposal guaranty as provided for in the special provisions. Failure on the part of the contractor to deliver the material within the time specified or to do the work specified herein will be considered just cause to forfeit his surety as provided in Article 108.10 of the Standard Specifications.

6. Proposals shall be submitted on forms furnished by the Awarding Authority and shall be enclosed in an envelope endorsed "Material Proposal, Section 22-01000-01-GM ".

By Order of Awarding Authority	County Engineer/Superintendent of Highways/ Municipal Clerk	Date
Tazewell County Board	Daniel L. Parr, Acting County Engr.	03/17/22

Material Proposal or Deliver & Install Proposal

To Awarding Authority

Tazewell County Board

Awarding Authority Address	City	State	Zip Code
11 South 4th Street	Pekin	IL	61554

If this bid is accepted within 45 days from the date of opening, the undersigned agrees to furnish or to deliver & install any or all of the materials, at the quoted unit prices, subject to the following:

1. It is understood and agreed that the "Standard Specifications for Road and Bridge Construction", adopted 01/01/22 and the "Supplemental Specifications and Recurring Special Provisions", adopted 01/01/22 , prepared by the Department of Transportation, shall govern insofar as they may be applied and insofar as they do not conflict with the special provision and supplemental specifications attached hereto.

2. It is understood that quantities listed are approximate only and that they may be increased or decrease as may be needed to properly complete the improvement within its present limits or extensions thereto, at the unit prices stated and that bids will be compared on the basis of total price bid for each group.

3. Delivery in total or partial shipments as ordered shall be made within the time specified in the special provisions or by the acceptance at the point and in the manner specified in the "Schedule of Prices". If delivery on the job site is specified, it shall mean any place or paces on the road designed by the awarding authority or its authorized representative.

4. The contractor and/or local public agency performing the actual material placement operations shall be responsible for providing work zone traffic control, unless otherwise specified in this proposal. Such devices shall meet the requirements of and be installed in accordance with applicable provisions of the "Illinois Manual on Uniform Traffic Control Devices" and any referenced Illinois Highway Standards.

Local Public Agency	County	Section Number
Boynton Road District	Tazewell	22-01000-01-GM

5. Each pay item should have a unit price and a total price. If no total price is shown or if there is a discrepancy between the product of the unit price multiplied by the quantity, the unit price shall govern. If a unit price is omitted, the total price will be divided by the quantity in order to establish a unit price. A bid will be declared unacceptable if neither a unit price nor a total price is shown.

6. A proposal guaranty in the proper amount, as specified in BLRS Special Provision for Bidding Requirements and Conditions for Contract Proposals, will be required. The proposal guaranty as specified in the special provisions is attached.

   If a bid bond is allowed or required, Department form BLR 12230 or a proposal guaranty check, complying with the specifications, made payable to: County Treasurer of Tazewell County .

   The amount of the check is _____ (_____).

Attach Cashier's Check or Certified Check Here

In the event that one proposal guaranty check is intended to cover two or more bid proposals, the amount must be equal to the sum of the proposal guaranties which would be required for each individual bid proposal. If the proposal guaranty check is place in another bid proposal, state below where it may be found.

The proposal guaranty check will be found in the bid proposal for: Section Number _____).

Discounts will be allowed for payment as follows: 0% 0 calendar days 0% 0 calendar days

Discounts will not be considered in determining the low bidder

Bidder			
By	Title		
Address	City	State	Zip Code

Illinois Department of Transportation

Local Public Agency Proposal Bid Bond

Local Public Agency	County	Section Number
Boynton Road District	Tazewell	22-01000-01-GM

WE, _____ as PRINCIPAL, and _____ as SURETY, are held jointly, severally and firmly bound unto the above Local Public Agency (hereafter referred to as "LPA") in the penal sum of 5% of the total bid price, or for the amount specified in the proposal documents in effect on the date of invitation for bids, whichever is the lesser sum. We bind ourselves, our heirs, executors, administrators, successors, and assigns, jointly pay to the LPA this sum under the conditions of this instrument.

WHEREAS THE CONDITION OF THE FOREGOING OBLIGATION IS SUCH that, the said PRINCIPAL is submitting a written proposal to the LPA acting through its awarding authority for the construction of the work designated as the above section.

THEREFORE if the proposal is accepted and a contract awarded to the PRINCIPAL by the LPA for the above designated section and the PRINCIPAL shall within fifteen (15) days after award enter into a formal contract, furnish surety guaranteeing the faithful performance of the work, and furnish evidence of the required insurance coverage, all as provided in the "Standard Specifications for Road and Bridge Construction" and applicable Supplemental Specifications, then this obligation shall become void; otherwise it shall remain in full force and effect.

IN THE EVENT the LPA determines the PRINCIPAL has failed to enter into a formal contract in compliance with any requirements set forth in the preceding paragraph, then the LPA acting through its awarding authority shall immediately be entitled to recover the full penal sum set out above, together with all court costs, all attorney fees, and any other expense of recovery.

IN TESTIMONY WHEREOF, the said PRINCIPAL and the said SURETY have caused this instrument to be signed by their respective officers this _____ of _____
Day Month and Year

Principal

Company Name		Company Name	
Signature	Date	Signature	Date
By:		By:	
Title		Title	

(If Principal is a joint venture of two or more contractors, the company names, and authorized signatures of each contractor must be affixed.)

Surety

Name of Surety	Signature of Attorney-in-Fact	Date
	By:	

STATE OF IL

COUNTY OF

I _____ , a Notary Public in and for said county do hereby certify that

_____
(Insert names of individuals signing on behalf of PRINCIPAL & SURETY)

who are each personally known to me to be the same persons whose names are subscribed to the foregoing instrument on behalf of PRINCIPAL and SURETY, appeared before me this day in person and acknowledged respectively, that they signed and delivered said instruments as their free and voluntary act for the uses and purposes therein set forth.

Given under my hand and notarial seal this _____ day of _____ .
Day Month and Year

Notary Public Signature

(SEAL)

Date commission expires _____

Local Public Agency	County	Section Number
Boynton Road District	Tazewell	22-01000-01-GM

ELECTRONIC BID BOND

☐ **Electronic bid bond is allowed (box must be checked by LPA if electronic bid bond is allowed)**

The Principal may submit an electronic bid bond, in lieu of completing the above section of the Proposal Bid Bond Form. By providing an electronic bid bond ID code and signing below, the Principal is ensuring the identified electronic bid bond has been executed and the Principal and Surety are firmly bound unto the LPA under the conditions of the bid bond as shown above. (If PRINCIPAL is a joint venture of two or more contractors, an electronic bid bond ID code, company/Bidder name title and date must be affixed for each contractor in the venture.)

Electronic Bid Bond ID Code

Company/Bidder Name

Signature

Date

Title

Illinois Department of Transportation

Affidavit of Availability

For the Letting of

Bureau of Construction
2300 South Dirksen Parkway/Room 322
Springfield, IL 62764

Instructions: Complete this form by either typing or using black ink. "Authorization to Bid" will not be issued unless both sides of this form are completed in detail. Use additional forms as needed to list all work.

Part I. Work Under Contract

List below all work you have under contract as either a prime contractor or a subcontractor. It is required to include all pending low bids not yet awarded or rejected. In a joint venture, list only that portion of the work which is the responsibility of your company. The uncompleted dollar value is to be based upon the most recent engineer's or owners estimate, and must include work subcontracted to others. If no work is contracted, show NONE.

	1	2	3	4	Awards Pending	Accumulated Totals
Contract Number						
Contract With						
Estimated Completion Date						
Total Contract Price						
Uncompleted Dollar Value if Firm is the Prime Contractor						
Uncompleted Dollar Value if Firm is the Subcontractor						
					Total Value of All Work	

Part II. Awards Pending and Uncompleted Work to be done with your own forces.

List below the uncompleted dollar value of work for each contract and awards pending to be completed with your own forces. All work subcontracted to others will be listed on the reverse of this form. In a joint venture, list only that portion of the work to be done by your company. If no work is contracted, show NONE.

Earthwork						
Portland Cement Concrete Paving						
HMA Plant Mix						
HMA Paving						
Clean & Seal Cracks/Joints						
Aggregate Bases, Surfaces						
Highway, R.R., Waterway Struc.						
Drainage						
Electrical						
Cover and Seal Coats						
Concrete Construction						
Landscaping						
Fencing						
Guardrail						
Painting						
Signing						
Cold Milling, Planning, Rotomilling						
Demolition						
Pavement Markings (Paint)						
Other Construction (List)						
Totals						

Disclosure of this information is REQUIRED to accomplish the statutory purpose as outlined in the “Illinois Procurement Code." Failure to comply will result in non-issuance of an "Authorization To Bid." This form has been approved by the State Forms Management Center.

Part III. Work Subcontracted to Others.

For each contract described in Part I, list all the work you have subcontracted to others.

	1	2	3	4	Awards Pending
Subcontractor					
Type of Work					
Subcontract Price					
Amount Uncompleted					
Subcontractor					
Type of Work					
Subcontract Price					
Amount Uncompleted					
Subcontractor					
Type of Work					
Subcontract Price					
Amount Uncompleted					
Subcontractor					
Type of Work					
Subcontract Price					
Amount Uncompleted					
Subcontractor					
Type of Work					
Subcontract Price					
Amount Uncompleted					

Total Uncompleted					

Notary

I, being duly sworn, do hereby declare this affidavit is a true and correct statement relating to ALL uncompleted contracts of the undersigned for Federal, State, County, City and private work, including ALL subcontract work, ALL pending low bids not yet awarded or rejected and ALL estimated completion dates.

Officer or Director

Title

Signature

Date

Company

Address

City

State

Zip Code

Subscribed and sworn to before me

this _____ day of _____ , _____

_____

(Signature of Notary Public)

My commission expires _____

(Notary Seal)

☐ Add pages for additional contracts

Illinois Department of Transportation

Material Proposal Schedule of Prices

Local Public Agency	County	Section Number
Boynton Road District	Tazewell	22-01000-01-GM

Material Proposal Schedule of Prices

	Group No.	Item(s)	Delivery	Unit	Quantity	Unit Price	Total
-		P BIT MATLS SE CT	Furnished & App	TON	147		
-		(CRS-2P)					
-		SEAL COAT AGG (CA-16)	Furnished & App	TON	731		
-		SEAL COAT AGG	Furnished & App	TON	326		
-		(EAF CM-16)					
-		TRAF CONT & PROT SPL	Furnished & App	L SUM	1		
-							
-							
-							
-							

Add Row

The undersigned firm certifies that it has not been convicted of bribery or attempting to bribe an officer or employee of the State of Illinois, nor has the firm made an admission of guilt of such conduct which is a matter of record, nor has an official, agent, or employee of the firm committed bribery or attempted bribery on behalf of the firm and pursuant to the direction or authorization of a responsible official of the firm. The undersigned firm further certifies that it is not barred from contracting with any unit of State or local government as a result of a violation of State laws prohibiting bid-rigging or bid rotating.

Signature of Bidder	Date

Address	City	State	Zip Code

Illinois Department of Transportation

Apprenticeship and Training Program Certification

Local Public Agency	County	Street Name/Road Name	Section Number
Boynton Road District	Tazewell	Various Routes	22-01000-01-GM

All contractors are required to complete the following certification

☒ For this contract proposal or for all bidding groups in this deliver and install proposal.

☐ For the following deliver and install bidding groups in this material proposal.

Illinois Department of Transportation policy, adopted in accordance with the provisions of the Illinois Highway Code, requires this contract to be awarded to the lowest responsive and responsible bidder. The award decision is subject to approval by the Department. In addition to all other responsibility factors, this contract or deliver and install proposal requires all bidders and all bidder's subcontractors to disclose participation in apprenticeship or training programs that are (1) approved by and registered with the United States Department of Labor's Bureau of Apprenticeship and Training, and (2) applicable to the work of the above indicated proposals or groups. Therefore, all bidders are required to complete the following certification:

1. Except as provided in paragraph 4 below, the undersigned bidder certifies that it is a participant, either as an individual or as part of a group program, in an approved apprenticeship or training program applicable to each type of work or craft that the bidder will perform with its own employees.

2. The undersigned bidder further certifies, for work to be performed by subcontract, that each of its subcontractors either (A) is, at the time of such bid, participating in an approved, applicable apprenticeship or training program; or (B) will, prior to commencement of performance of work pursuant to this contract, establish participation in an approved apprenticeship or training program applicable to the work of the subcontract.

3. The undersigned bidder, by inclusion in the list in the space below, certifies the official name of each program sponsor holding the Certificate of Registration for all of the types of work or crafts in which the bidder is a participant and that will be performed with the bidder's employees. Types of work or craft that will be subcontracted shall be included and listed as subcontract work. The list shall also indicate any type of work or craft job category for which there is no applicable apprenticeship or training program available.

4. Except for any work identified above, if any bidder or subcontractor shall perform all or part of the work of the contract or deliver and install proposal solely by individual owners, partners or members and not by employees to whom the payment of prevailing rates of wages would be required, check the following box, and identify the owner/operator workforces and positions of ownership. ☐

The requirements of this certification and disclosure are a material part of the contract, and the contractor shall require this certification provision to be included in all approved subcontracts. The bidder is responsible for making a complete report and shall make certain that each type of work or craft job category that will be utilized on the project is accounted for and listed. The Department at any time before or afterward may require the production of a copy of each applicable Certificate of Registration issued by the United States Department of Labor evidencing such participation by the contractor and any or all of its subcontractors. In order to fulfill the participation requirement, it shall not be necessary that any applicable program sponsor be currently taking or that it will take applications for apprenticeship, training or employment during the performance of the work of this contract or deliver and install proposal.

Bidder

Signature

Date

Title

Address

City

State

Zip Code

Illinois Department of Transportation

Affidavit of Illinois Business Office

Local Public Agency	County	Street Name/Road Name	Section Number
Boynton R.D.	Tazewell	Various Routes	22-01000-01-GM

I, _____ of _____ , _____ ,
Name of Affiant — City of Affiant — State of Affiant

being first duly sworn upon oath, state as follows:

1. That I am the _____ of _____ .
Officer or Position — Bidder

2. That I have personal knowledge of the facts herein stated.

3. That, if selected under the proposal described above, _____ , will maintain a business office in the
Bidder

State of Illinois, which will be located in _____ County, Illinois.
County

4. That this business office will serve as the primary place of employment for any persons employed in the construction contemplated by this proposal.

5. That this Affidavit is given as a requirement of state law as provided in Section 30-22(8) of the Illinois Procurement Code.

Signature	Date

Print Name of Affiant

Notary Public

State of IL

County _____

Signed (or subscribed or attested) before me on _____ by
(date)

_____ , authorized agent(s) of
(name/s of person/s)

_____ .
Bidder

Signature of Notary Public

(SEAL)

My commission expires _____

INDEX
FOR
SUPPLEMENTAL SPECIFICATIONS
AND RECURRING SPECIAL PROVISIONS

Adopted January 1, 2022

This index contains a listing of SUPPLEMENTAL SPECIFICATIONS, frequently used RECURRING SPECIAL PROVISIONS, and LOCAL ROADS AND STREETS RECURRING SPECIAL PROVISIONS.

No ERRATA this year.

SUPPLEMENTAL SPECIFICATIONS

Std. Spec. Sec.	Page No.

No Supplemental Specifications this year.

Illinois Department of Transportation

Check Sheet for Recurring Special Provisions

Local Public Agency	County	Section Number
Boynton Road District	Tazewell	22-01000-01-GM

☐ **Check this box for lettings prior to 01/01/2022.**

The Following Recurring Special Provisions Indicated By An "X" Are Applicable To This Contract And Are Included By Reference:

Recurring Special Provisions

Check Sheet #			Reference Page No.
1	☐	Additional State Requirements for Federal-Aid Construction Contracts	1
2	☐	Subletting of Contracts (Federal-Aid Contracts)	4
3	☐	EEO	5
4	☐	Specific EEO Responsibilities Non Federal-Aid Contracts	15
5	☐	Required Provisions - State Contracts	20
6	☐	Asbestos Bearing Pad Removal	26
7	☐	Asbestos Waterproofing Membrane and Asbestos HMA Surface Removal	27
8	☐	Temporary Stream Crossings and In-Stream Work Pads	28
9	☐	Construction Layout Stakes	29
10	☐	Use of Geotextile Fabric for Railroad Crossing	32
11	☐	Subsealing of Concrete Pavements	34
12	☐	Hot-Mix Asphalt Surface Correction	38
13	☐	Pavement and Shoulder Resurfacing	40
14	☐	Patching with Hot-Mix Asphalt Overlay Removal	41
15	☐	Polymer Concrete	43
16	☐	PVC Pipeliner	45
17	☐	Bicycle Racks	46
18	☐	Temporary Portable Bridge Traffic Signals	48
19	☐	Nighttime Inspection of Roadway Lighting	50
20	☐	English Substitution of Metric Bolts	51
21	☐	Calcium Chloride Accelerator for Portland Cement Concrete	52
22	☐	Quality Control of Concrete Mixtures at the Plant	53
23	☐	Quality Control/Quality Assurance of Concrete Mixtures	61
24	☐	Digital Terrain Modeling for Earthwork Calculations	77
25	☐	Preventive Maintenance - Bituminous Surface Treatment (A-1)	79
26	☐	Temporary Raised Pavement Markers	85
27	☐	Restoring Bridge Approach Pavements Using High-Density Foam	86
28	☐	Portland Cement Concrete Inlay or Overlay	89
29	☐	Portland Cement Concrete Partial Depth Hot-Mix Asphalt Patching	93
30	☐	Longitudinal Joint and Crack Patching	96
31	☐	Concrete Mix Design - Department Provided	98
32	☐	Station Numbers in Pavements or Overlays	99

Local Public Agency	County	Section Number
Boynton Road District	Tazewell	22-01000-01-GM

The Following Local Roads And Streets Recurring Special Provisions Indicated By An "X" Are Applicable To This Contract And Are Included By Reference:

Local Roads And Streets Recurring Special Provisions

Check Sheet #			Page No.
LRS 1		**Reserved**	101
LRS 2	☐	Furnished Excavation	102
LRS 3	☒	Work Zone Traffic Control Surveillance	103
LRS 4	☒	Flaggers in Work Zones	104
LRS 5	☒	Contract Claims	105
LRS 6	☐	Bidding Requirements and Conditions for Contract Proposals	106
LRS 7	☒	Bidding Requirements and Conditions for Material Proposals	112
LRS 8		**Reserved**	118
LRS 9	☒	Bituminous Surface Treatments	119
LRS 10		**Reserved**	123
LRS 11	☒	Employment Practices	124
LRS 12	☒	Wages of Employees on Public Works	126
LRS 13	☒	Selection of Labor	128
LRS 14	☐	Paving Brick and Concrete Paver Pavements and Sidewalks	129
LRS 15	☒	Partial Payments	132
LRS 16	☐	Protests on Local Lettings	133
LRS 17	☒	Substance Abuse Prevention Program	134
LRS 18	☐	Multigrade Cold Mix Asphalt	135
LRS 19	☐	Reflective Crack Control Treatment	136

TABLE OF CONTENTS

Page 1	Description of Work
	Proposal Guaranty
	Traffic
	Traffic Control Plan
Page 2	Traffic Control Plan (Cont'd.)
	Bituminous Surface Treatment, Class A
	Weight Limits
	Pre-Construction Meeting
Page 3	Liquidated Damages
	Time Schedule
	Wages of Employees on Public Works
Page 4-5	BDE Special Provisions Check Sheets
Page 6-11	BDE Special Provisions
Page 12-17	LR Special Provisions
Page 18	Project Location Map
Page 19	Quantity Sheet
Page 20	Highway Standard 701011-04
Page 21	Highway Standard 701306-04
Page 22-24	Highway Standard 701901-08

Illinois Department of Transportation

Special Provisions

Local Public Agency	County	Section Number
Boynton R.D.	Tazewell	22-01000-01-GM

The following Special Provision supplement the "Standard Specifications for Road and Bridge Construction", adopted January 1, 2022, the latest edition of the "Manual on Uniform Traffic Control Devices for Streets and Highways", and the "Manual of Test Procedures of Materials" in effect on the date of invitation of bids, and the Supplemental Specification and Recurring Special Provisions indicated on the Check Sheet included here in which apply to and govern the construction of the above named section, and in case of conflict with any parts, or parts of said Specifications, the said Special Provisions shall take precedence and shall govern.

DESCRIPTION OF WORK: The work of this section consists of the construction of a Bituminous Surface Treatment, Class A-1 over existing bituminous surfaces.

PROPOSAL GUARANTY: A proposal guaranty in the proper amount, as specified in the BLRS Special Provision for Bidding Requirements and Conditions for Material Proposals, will be required.

TRAFFIC: The roads shall remain open for both local and through traffic.

TRAFFIC CONTROL PLAN: Traffic Control shall be in accordance with the applicable sections of the “Standard Specifications for Road and Bridge Construction”, the applicable guidelines contained in the “Manual on Uniform Traffic Control Devices for Streets and Highways”, these Special Provisions, and any special details and Highway Standards contained herein and in the plans.

Special attention is called to Articles 107.09, 107.14, 107.15 and Section 1106 of the “Standard Specifications for Road and Bridge Construction” and the Traffic Control Standards 701011-04, 701306-04 and 701901-08.

The Contractor shall post the construction routes with "LOOSE GRAVEL" and "SPEED LIMIT 35" signs immediately prior to seal coat operations in accordance with applicable articles of Division 700 of the Standard Specifications. The signs shall be placed at the start of the work, near intersecting roadways and then at an average spacing of 0.50 miles. These signs may be removed as soon as the final sweeping operation has been completed or at the direction of the Engineer.

The presence of temporary traffic control drawings or standards in the proposal or contract, whether a pay item or not, does not relieve the Contractor of his obligation to the public. The Contractor shall provide, if conditions warrant by the Engineer, all protection deemed necessary beyond that shown in the proposal or Special Provisions.

The Contractor shall be responsible for all traffic control operations as follows:

1. The Contractor shall provide two flaggers and two pickup trucks, each equipped with a mounted yellow flashing light, a mounted “Road Closed” sign (R11-2), a mounted “Fresh Oil” sign (W21-2), and a “Flagger Traffic Control Sign” (Stop/Slow paddle). These flaggers shall be placed at the intersection immediately ahead of and behind the seal coat operation to control the traffic. Flaggers must hold the “Flagger Traffic Control Sign” (Stop/Slow paddle).

2. The Contractor must equip all of their oil distributors, chip spreaders and rollers with a mounted yellow flashing light.

3. The Contractor shall equip all of their rollers with a “Fresh Oil” sign (W21-2).

4. The Contractor shall place a “Road Closed Ahead” sign (W20-3) 750 feet prior to the intersection where the required pickup truck is controlling traffic if the pickup truck is not visible at that point to oncoming traffic.

Basis of payment: All Traffic Control shall be paid for at the contract-lump sum price for TRAFFIC CONTROL AND PROTECTION, (SPECIAL)

BITUMINOUS SURFACE TREATMENT, CLASS A: This work shall conform to the applicable portions of Check Sheet #LRS9, Special Provisions for Bituminous Surface Treatments, of the “Supplemental Specifications and Recurring Special Provisions", with the following exceptions and inclusions:

MATERIALS - Add the following:

The Bituminous Materials shall be CRS-2P where specified on the quantity sheet.

The Seal Coat Aggregate shall be CA-16 where specified on the quantity sheet.

The Seal Coat Aggregate shall be Electric Air Furnace Slag CM-16 in accordance with Article 1004.01 (a) (10) where specified on the quantity sheet.

APPLICATION: Rates per Square Yard (Estimated)

When using CRS-2P for Bituminous Surface Treatment, Class A-1:

Polymerized Bituminous Materials- Seal Coat	-0.42 gallon (CA-16)
Polymerized Bituminous Materials- Seal Coat	-0.55 gallon (EAF CM-16)
Seal Coat Aggregate (CA-16)	- 27 pounds
Seal Coat Aggregate (EAF CM-16)	- 30 pounds

EQUIPMENT- Add the following:
(a) Rollers- Rollers shall include both a Pneumatic-Tired Roller meeting the requirements of Article 1101.01 (a) and either a Tandem Roller or a Three Wheel Roller meeting the requirements of Article1101.01 (e).

SEQUENCE OF WORK: Change item (a) as follows: Mechanical power sweeping of surface is required prior to Bituminous Surface Treatment, Class A-1 application.

SEAL COAT- Add the following:

Final sweeping shall not commence until 10 days after seal coat work is completed or at the direction of the Engineer.

Basis of Payment: This work will be paid for at the contract unit price per ton for POLYMERIZED BITUMINOUS MATERIALS (SEAL COAT) CRS-2P, SEAL COAT AGGREGATE (CA-16) and SEAL COAT AGGREGATE (EAF CM-16).

WEIGHT LIMITS: Legal weight limits shall be observed on Boynton Road District roads and the structures they contain at all times.

PRE-CONSTRUCTION MEETING: A pre-construction meeting for this Section is required.

Local Public Agency	County	Section Number
Boynton R.D.	Tazewell	22-01000-01-GM

LIQUIDATED DAMAGES: Liquidated damages shall be assessed in accordance with Article 108.09 of the "Standard Specifications for Road and Bridge Construction".

TIME SCHEDULE: The specified completion date for this project is August 15, 2022.

WAGES OF EMPLOYEES ON PUBLIC WORKS: Add the following to paragraph #1 of the Special Provision for Wages of Employees on Public Works, Check Sheet LRS#12: Prevailing wage rates may be obtained from the IDOL (Illinois Department of Labor) website at:

https://www2.illinois.gov/idol/Laws-Rules/CONMED/Pages/Rates.aspx

BDE SPECIAL PROVISIONS
For the April 29, 2022 and June 17, 2022 Lettings

The following special provisions indicated by a "check mark" are applicable to this contract and will be included by the Project Coordination and Implementation Section of the BD&E. An * indicates a new or revised special provision for the letting.

	File Name	#		Special Provision Title	Effective	Revised
	80099	1	☐	Accessible Pedestrian Signals (APS)	April 1, 2003	Jan. 1, 2022
*	80274	2	☐	Aggregate Subgrade Improvement	April 1, 2012	April 1, 2022
	80192	3	☐	Automated Flagger Assistance Device	Jan. 1, 2008	
	80173	4	☐	Bituminous Materials Cost Adjustments	Nov. 2, 2006	Aug. 1, 2017
	80426	5	☐	Bituminous Surface Treatment with Fog Seal	Jan. 1, 2020	Jan. 1, 2022
	80436	6	☐	Blended Finely Divided Minerals	April 1, 2021	
	80241	7	☐	Bridge Demolition Debris	July 1, 2009	
	5026I	8	☐	Building Removal-Case I (Non-Friable and Friable Asbestos)	Sept. 1, 1990	April 1, 2010
	5048I	9	☐	Building Removal-Case II (Non-Friable Asbestos)	Sept. 1, 1990	April 1, 2010
	5049I	10	☐	Building Removal-Case III (Friable Asbestos)	Sept. 1, 1990	April 1, 2010
	5053I	11	☐	Building Removal-Case IV (No Asbestos)	Sept. 1, 1990	April 1, 2010
	80384	12	☑	Compensable Delay Costs	June 2, 2017	April 1, 2019
	80198	13	☐	Completion Date (via calendar days)	April 1, 2008	
	80199	14	☐	Completion Date (via calendar days) Plus Working Days	April 1, 2008	
	80293	15	☐	Concrete Box Culverts with Skews > 30 Degrees and Design Fills ≤ 5 Feet	April 1, 2012	July 1, 2016
	80311	16	☐	Concrete End Sections for Pipe Culverts	Jan. 1, 2013	April 1, 2016
	80261	17	☐	Construction Air Quality – Diesel Retrofit	June 1, 2010	Nov. 1, 2014
	80434	18	☐	Corrugated Plastic Pipe (Culvert and Storm Sewer)	Jan. 1, 2021	
	80029	19	☐	Disadvantaged Business Enterprise Participation	Sept. 1, 2000	March 2, 2019
	80229	20	☐	Fuel Cost Adjustment	April 1, 2009	Aug. 1, 2017
	80433	21	☐	Green Preformed Thermoplastic Pavement Markings	Jan. 1, 2021	Jan. 1, 2022
	80422	22	☐	High Tension Cable Median Barrier	Jan. 1, 2020	Jan. 1, 2022
*	80443	23	☐	High Tension Cable Median Barrier Removal	April 1, 2022	
*	80444	24	☐	Hot-Mix Asphalt – Patching	April 1, 2022	
	80442	25	☐	Hot-Mix Asphalt – Start of Production	Jan. 1, 2022	
	80438	26	☐	Illinois Works Apprenticeship Initiative – State Funded Contracts	June 2, 2021	Sept. 2, 2021
	80411	27	☐	Luminaires, LED	April 1, 2019	Jan. 1, 2022
	80045	28	☐	Material Transfer Device	June 15, 1999	Jan. 1, 2022
	80418	29	☐	Mechanically Stabilized Earth Retaining Walls	Nov. 1, 2019	Nov. 1, 2020
	80430	30	☐	Portland Cement Concrete – Haul Time	July 1, 2020	
	3426I	31	☐	Railroad Protective Liability Insurance	Dec. 1, 1986	Jan. 1, 2022
	80395	32	☐	Sloped Metal End Section for Pipe Culverts	Jan. 1, 2018	
	80340	33	☐	Speed Display Trailer	April 2, 2014	Jan. 1, 2022
	80127	34	☐	Steel Cost Adjustment	April 2, 2004	Jan. 1, 2022
	80397	35	☐	Subcontractor and DBE Payment Reporting	April 2, 2018	
	80391	36	☑	Subcontractor Mobilization Payments	Nov. 2, 2017	April 1, 2019
	80437	37	☐	Submission of Payroll Records	April 1, 2021	
	80435	38	☐	Surface Testing of Pavements – IRI	Jan. 1, 2021	Jan. 1, 2022
	80410	39	☐	Traffic Spotters	Jan. 1, 2019	
	20338	40	☐	Training Special Provisions	Oct. 15, 1975	Sept. 2, 2021
	80318	41	☐	Traversable Pipe Grate for Concrete End Sections	Jan. 1, 2013	Jan. 1, 2018
	80429	42	☐	Ultra-Thin Bonded Wearing Course	April 1, 2020	Jan. 1, 2022
	80439	43	☑	Vehicle and Equipment Warning Lights	Nov. 1, 2021	
	80440	44	☐	Waterproofing Membrane System	Nov. 1, 2021	
	80302	45	☐	Weekly DBE Trucking Reports	June 2, 2012	Nov. 1, 2021
	80427	46	☐	Work Zone Traffic Control Devices	Mar. 2, 2020	
	80071	47	☐	Working Days	Jan. 1, 2002	

The following special provisions are in the 2022 Standard Specifications and Recurring Special Provisions.

File Name	Special Provision Title	New Location(s)	Effective	Revised
80425	Cape Seal	Sections 405, 1003	Jan. 1, 2020	Jan. 1, 2021
80387	Contrast Preformed Plastic Pavement Marking	Articles 780.08, 1095.03	Nov. 1, 2017	
80402	Disposal Fees	Article 109.04(b)	Nov. 1, 2018	
80378	Dowel Bar Inserter	Articles 420.03, 420.05, 1103.20	Jan. 1, 2017	Jan. 1, 2018
80421	Electric Service Installation	Articles 804.04, 804.05	Jan. 1, 2020	
80415	Emulsified Asphalts	Article 1032.06	Aug. 1, 2019	
80423	Engineer's Field Office and Laboratory	Section 670	Jan. 1, 2020	
80417	Geotechnical Fabric for Pipe Underdrains and French Drains	Articles 1080.01(a), 1080.05	Nov. 1, 2019	
80420	Geotextile Retaining Walls	Article 1080.06(d)	Nov. 1, 2019	
80304	Grooving for Recessed Pavement Markings	Articles 780.05, 780.14, 780.15	Nov. 1, 2012	Nov. 1, 2020
80416	Hot-Mix Asphalt – Binder and Surface Course	Sections 406, 1003, 1004, 1030, 1101	July 2, 2019	Nov. 1, 2019
80398	Hot-Mix Asphalt – Longitudinal Joint Sealant	Sections 406, 1032	Aug. 1, 2018	Nov. 1, 2019
80406	Hot-Mix Asphalt – Mixture Design Verification and Production (Modified for I-FIT)	Sections 406, 1030	Jan. 1, 2019	Jan. 2, 2021
80347	Hot-Mix Asphalt – Pay for Performance Using Percent Within Limits – Jobsite Sampling	Sections 406, 1030	Nov. 1, 2014	July 2, 2019
80383	Hot-Mix Asphalt – Quality Control for Performance	Sections 406, 1030	April 1, 2017	July 2, 2019
80393	Manholes, Valve Vaults, and Flat Slab Tops	Articles 602.02, 1042.10	Jan. 1, 2018	Mar. 1, 2019
80424	Micro-Surfacing and Slurry Sealing	Sections 404, 1003	Jan. 1, 2020	Jan. 1, 2021
80428	Mobilization	Article 671.02	April 1, 2020	
80412	Obstruction Warning Luminaires, LED	Sections 801, 822, 1067	Aug. 1, 2019	
80359	Portland Cement Concrete Bridge Deck Curing	Articles 1020.13, 1022.03	April 1, 2015	Nov. 1, 2019
80431	Portland Cement Concrete Pavement Patching	Articles 701.17(e)(3)b, 1001.01(d), 1020.05(b)(5)	July 1, 2020	
80432	Portland Cement Concrete Pavement Placement	Article 420.07	July 1, 2020	
80300	Preformed Plastic Pavement Marking Type D - Inlaid	Articles 780.08, 1095.03	April 1, 2012	April 1, 2016
80157	Railroad Protective Liability Insurance (5 and 10)	Article 107.11	Jan. 1, 2006	
80306	Reclaimed Asphalt Pavement (RAP) and Reclaimed Asphalt Shingles (RAS)	Section 1031	Nov. 1, 2012	Jan. 2, 2021
80407	Removal and Disposal of Regulated Substances	Section 669	Jan. 1 2019	Jan. 1, 2020
80419	Silt Fence, Inlet Filters, Ground Stabilization and Riprap Filter Fabric	Articles 280.02, 280.04, 1080.02, 1080.03, 1081.15	Nov. 1, 2019	July 1, 2021
80408	Steel Plate Beam Guardrail Manufacturing	Article 1006.25	Jan. 1, 2019	
80413	Structural Timber	Article 1007.03	Aug. 1, 2019	
80298	Temporary Pavement Marking	Section 703, Article 1095.06	April 1, 2012	April 1, 2017
80409	Traffic Control Devices – Cones	Article 701.15(a), 1106.02(b)	Jan. 1, 2019	
80288	Warm Mix Asphalt	Sections 406, 1030, 1102	Jan. 1, 2012	April 1, 2016
80414	Wood Fence Sight Screen	Article 641.02	Aug. 1, 2019	April 1, 2020

The following special provisions require additional information from the designer. The additional information needs to be submitted as a separate document. The Project Coordination and Implementation section will then include the information in the applicable special provision.

- Bridge Demolition Debris
- Building Removal - Case I
- Building Removal – Case II
- Building Removal - Case III
- Building Removal-Case IV
- Completion Date
- Completion Date Plus Working Days
- DBE Participation
- Railroad Protective Liability Insurance
- Training Special Provisions
- Working Days

COMPENSABLE DELAY COSTS (BDE)

Effective: June 2, 2017
Revised: April 1, 2019

Revise Article 107.40(b) of the Standard Specifications to read:

"(b) Compensation. Compensation will not be allowed for delays, inconveniences, or damages sustained by the Contractor from conflicts with facilities not meeting the above definition; or if a conflict with a utility in an unanticipated location does not cause a shutdown of the work or a documentable reduction in the rate of progress exceeding the limits set herein. The provisions of Article 104.03 notwithstanding, compensation for delays caused by a utility in an unanticipated location will be paid according to the provisions of this Article governing minor and major delays or reduced rate of production which are defined as follows.

(1) Minor Delay. A minor delay occurs when the work in conflict with the utility in an unanticipated location is completely stopped for more than two hours, but not to exceed two weeks.

(2) Major Delay. A major delay occurs when the work in conflict with the utility in an unanticipated location is completely stopped for more than two weeks.

(3) Reduced Rate of Production Delay. A reduced rate of production delay occurs when the rate of production on the work in conflict with the utility in an unanticipated location decreases by more than 25 percent and lasts longer than seven calendar days."

Revise Article 107.40(c) of the Standard Specifications to read:

"(c) Payment. Payment for Minor, Major, and Reduced Rate of Production Delays will be made as follows.

(1) Minor Delay. Labor idled which cannot be used on other work will be paid for according to Article 109.04(b)(1) and (2) for the time between start of the delay and the minimum remaining hours in the work shift required by the prevailing practice in the area.

Equipment idled which cannot be used on other work, and which is authorized to standby on the project site by the Engineer, will be paid for according to Article 109.04(b)(4).

(2) Major Delay. Labor will be the same as for a minor delay.

Equipment will be the same as for a minor delay, except Contractor-owned equipment will be limited to two weeks plus the cost of move-out to either the

Contractor's yard or another job and the cost to re-mobilize, whichever is less. Rental equipment may be paid for longer than two weeks provided the Contractor presents adequate support to the Department (including lease agreement) to show retaining equipment on the job is the most economical course to follow and in the public interest.

(3) Reduced Rate of Production Delay. The Contractor will be compensated for the reduced productivity for labor and equipment time in excess of the 25 percent threshold for that portion of the delay in excess of seven calendar days. Determination of compensation will be in accordance with Article 104.02, except labor and material additives will not be permitted.

Payment for escalated material costs, escalated labor costs, extended project overhead, and extended traffic control will be determined according to Article 109.13."

Revise Article 108.04(b) of the Standard Specifications to read:

"(b) No working day will be charged under the following conditions.

(1) When adverse weather prevents work on the controlling item.

(2) When job conditions due to recent weather prevent work on the controlling item.

(3) When conduct or lack of conduct by the Department or its consultants, representatives, officers, agents, or employees; delay by the Department in making the site available; or delay in furnishing any items required to be furnished to the Contractor by the Department prevents work on the controlling item.

(4) When delays caused by utility or railroad adjustments prevent work on the controlling item.

(5) When strikes, lock-outs, extraordinary delays in transportation, or inability to procure critical materials prevent work on the controlling item, as long as these delays are not due to any fault of the Contractor.

(6) When any condition over which the Contractor has no control prevents work on the controlling item."

Revise Article 109.09(f) of the Standard Specifications to read:

"(f) Basis of Payment. After resolution of a claim in favor of the Contractor, any adjustment in time required for the work will be made according to Section 108. Any adjustment in the costs to be paid will be made for direct labor, direct materials, direct equipment, direct jobsite overhead, direct offsite overhead, and other direct costs allowed by the resolution. Adjustments in costs will not be made for interest charges, loss of anticipated profit, undocumented loss of efficiency, home office overhead and unabsorbed overhead

other than as allowed by Article 109.13, lost opportunity, preparation of claim expenses and other consequential indirect costs regardless of method of calculation.

The above Basis of Payment is an essential element of the contract and the claim cost recovery of the Contractor shall be so limited."

Add the following to Section 109 of the Standard Specifications.

"**109.13 Payment for Contract Delay.** Compensation for escalated material costs, escalated labor costs, extended project overhead, and extended traffic control will be allowed when such costs result from a delay meeting the criteria in the following table.

Contract Type	Cause of Delay	Length of Delay
Working Days	Article 108.04(b)(3) or Article 108.04(b)(4)	No working days have been charged for two consecutive weeks.
Completion Date	Article 108.08(b)(1) or Article 108.08(b)(7)	The Contractor has been granted a minimum two week extension of contract time, according to Article 108.08.

Payment for each of the various costs will be according to the following.

(a) Escalated Material and/or Labor Costs. When the delay causes work, which would have otherwise been completed, to be done after material and/or labor costs have increased, such increases will be paid. Payment for escalated material costs will be limited to the increased costs substantiated by documentation furnished by the Contractor. Payment for escalated labor costs will be limited to those items in Article 109.04(b)(1) and (2), except the 35 percent and 10 percent additives will not be permitted.

(b) Extended Project Overhead. For the duration of the delay, payment for extended project overhead will be paid as follows.

(1) Direct Jobsite and Offsite Overhead. Payment for documented direct jobsite overhead and documented direct offsite overhead, including onsite supervisory and administrative personnel, will be allowed according to the following table.

Original Contract Amount	Supervisory and Administrative Personnel
Up to $5,000,000	One Project Superintendent
Over $ 5,000,000 - up to $25,000,000	One Project Manager, One Project Superintendent or Engineer, and One Clerk
Over $25,000,000 - up to $50,000,000	One Project Manager, One Project Superintendent, One Engineer, and

	One Clerk
Over $50,000,000	One Project Manager, Two Project Superintendents, One Engineer, and One Clerk

(2) Home Office and Unabsorbed Overhead. Payment for home office and unabsorbed overhead will be calculated as 8 percent of the total delay cost.

(c) Extended Traffic Control. Traffic control required for an extended period of time due to the delay will be paid for according to Article 109.04.

When an extended traffic control adjustment is paid under this provision, an adjusted unit price as provided for in Article 701.20(a) for increase or decrease in the value of work by more than ten percent will not be paid.

Upon payment for a contract delay under this provision, the Contractor shall assign subrogation rights to the Department for the Department's efforts of recovery from any other party for monies paid by the Department as a result of any claim under this provision. The Contractor shall fully cooperate with the Department in its efforts to recover from another party any money paid to the Contractor for delay damages under this provision."

80384

SUBCONTRACTOR MOBILIZATION PAYMENTS (BDE)

Effective: November 2, 2017
Revised: April 1, 2019

Replace the second paragraph of Article 109.12 of the Standard Specifications with the following:

"This mobilization payment shall be made at least seven days prior to the subcontractor starting work. The amount paid shall be at the following percentage of the amount of the subcontract reported on form BC 260A submitted for the approval of the subcontractor's work.

Value of Subcontract Reported on Form BC 260A	Mobilization Percentage
Less than $10,000	25%
$10,000 to less than $20,000	20%
$20,000 to less than $40,000	18%
$40,000 to less than $60,000	16%
$60,000 to less than $80,000	14%
$80,000 to less than $100,000	12%
$100,000 to less than $250,000	10%
$250,000 to less than $500,000	9%
$500,000 to $750,000	8%
Over $750,000	7%"

80391

VEHICLE AND EQUIPMENT WARNING LIGHTS (BDE)

Effective: November 1, 2021

Add the following paragraph after the first paragraph of Article 701.08 of the Standard Specifications:

"The Contractor shall equip all vehicles and equipment with high-intensity oscillating, rotating, or flashing, amber or amber-and-white, warning lights which are visible from all directions. The lights shall be in operation while the vehicle or equipment is engaged in construction operations."

80439

State of Illinois
Department of Transportation
Bureau of Local Roads and Streets

SPECIAL PROVISION
FOR
INSURANCE

Effective: February 1, 2007
Revised: August 1, 2007

All references to Sections or Articles in this specification shall be construed to mean specific Section or Article of the Standard Specifications for Road and Bridge Construction, adopted by the Department of Transportation.

The Contractor shall name the following entities as additional insured under the Contractor's general liability insurance policy in accordance with Article 107.27:

Boynton Road District

Tazewell County

The entities listed above and their officers, employees, and agents shall be indemnified and held harmless in accordance with Article 107.26.

State of Illinois
Department of Transportation
Bureau of Local Roads and Streets

SPECIAL PROVISION
FOR
EQUIPMENT RENTAL RATES

Effective: January 1, 2012

All references to Sections or Articles in this specification shall be construed to mean a specific Section or Article of the Standard Specifications for Road and Bridge Construction, adopted by the Department of Transportation.

Replace Article 109.04(b)(4) with the following:

"(4) Equipment. For any machinery or special equipment (other than small tools) the use of which has been authorized by the Engineer, the Contractor will be paid according to the latest revision of “SCHEDULE OF AVERAGE ANNUAL EQUIPMENT OWNERSHIP EXPENSE” and latest index factor as issued by the Illinois Department of Transportation. The equipment should be of a type and size reasonably required to complete the extra work.”

State of Illinois
Department of Transportation
Bureau of Local Roads and Streets

SPECIAL PROVISION
FOR
COARSE AGGREGATE FOR BITUMINOUS SURFACE TREATMENT

Effective: January 1, 2002
Revised: January 1, 2007

All references to Sections or Articles in this special provision shall be construed to mean specific Section or Article of the Standard Specifications for Road and Bridge Construction, adopted by the Department of Transportation.

This work shall be performed according to Section 403 and the following:

1004.01 Materials. Add the following to the gradation tables in subparagraph (c) of Article 1004.01:

Coarse Aggregate Gradations					
Sieve Size Percent Passing					
Grad No.	12.5 mm ½ in.	9.5 mm 3/8 in.	4.75 mm #4	2.36 mm #8	1.18 mm #16
CA 20	100	92 ± 8	20 ± 10	5 ± 5	3 ±3

1004.03 Coarse Aggregate for Hot-Mix Asphalt (HMA). Revise the first line of the table in subparagraph (c) of Article 1004.03 to read:

Use	Size/Application	Gradation No.
Class A-1, 2, & 3	3/8 in. (10 mm) Seal	CA 20 3/

Add the following note to the end of subparagraph (c) of Article 1004.03:

"3/ CA16 or CM16 produced under the AGCS Program with a master band may be used if it meets the gradation requirements specified for CA20 in Article 1004.01(c)"

Amend the Aggregate Gradation Control System (AGCS) Policy Memorandum to add the following:

"CA 20 shall be produced under the AGCS program. However, the gradation bands may not be adjusted."

State of Illinois
DEPARTMENT OF TRANSPORTATION
Bureau of Local Roads & Streets

SPECIAL PROVISION FOR EMULSIFIED ASPHALTS

Effective: January 1, 2007
Revised: February 7, 2008

All references to Sections and Articles in this Special Provision shall be construed to mean specific Sections and Articles in the Standard Specifications for Road and Bridge Construction adopted by the Department of Transportation.

Replace the table after Note 2 in Article 403.02 with the following:

Type of Construction	Bituminous Materials Recommended for Weather Conditions Indicated	
	Warm [15 °C to 30 °C]* [(60 °F to 85 °F)]*	Hot [30 °C Plus]* [(85 °F Plus)]*
Prime	MC-30, PEP	MC-30, PEP
Cover Coat and Seal Coat	RS-2, CRS-2, RC-800, RC-3000, MC-800, MC-3000, SC-3000, HFE-90, HFE-150, HFE-300, HFRS-2, PEA**	RS-2, CRS-2, RC-800, RC-3000, MC-800, MC-3000, SC-3000, PG46-28, PG52-28, HFE-90, HFE-150, HFE-300, HFRS-2, PEA**

* Temperature of the air in the shade at the time of application.
** PEA is only allowed on roads with low traffic volumes

Replace the table after Note 2 in Article 406.02 with the following:

Type of Construction	Bituminous Materials Recommended
Prime (tack) on Brick, Concrete, or Bituminous Bases (Note 3)	SS-1, SS-1h, CSS-1, CSS-1h, HFE-90, RC-70
Prime on Aggregate Bases (Note 4)	MC-30, PEP
Mixture for Cracks, Joints, and Flangeways	PG58-22, PG64-22

Note 3. When emulsified asphalts are used, they shall be diluted with an equal volume of potable water. HFE emulsions shall be diluted by the manufacturer. The diluted material shall be thoroughly agitated within 24 hours of application and show no separation of water and emulsion. The diluted material shall not be returned to an approved emulsion storage tank.

Note 4. Preparation of the bituminous PEP shall be as specified in Article 403.05.

Replace the table in Article 1032.04 with the following:

Spraying Application Temperature Ranges		
Type and Grade of Bituminous Material	Temperature Ranges	
	°F min. - max.	°C min. - max.
PEP	60 - 130	15 - 55
PEA	140 - 190	60 -88
MC-30	85 - 190	30 - 90
MC-70, RC-70, SC-70	120 - 225	50 - 105
MC-250, SC-250	165 - 270	75 - 130
MC-800, SC-800	200 - 305	95 - 150
MC-3000, SC-3000	230 - 345	110 - 175
PG46-28	275 - 385	135 - 195
PG52-28	285 - 395	140 - 200
RS-2, CRS-2	110 - 160	45 - 70
SS-1, SS-1h, CSS-1, CSS-1h	75 - 130	25 - 55
SS-1hP, CSS-1hP	75 - 130	25 - 55
HFE-90, HFE-150, HFE-300	150 - 180	65 - 80
HFP, CRSP, HFRS-2	150 - 180	65 - 80
E-2	85 - 190	30 - 90
E-3	120 - 225	50 - 105
E-4	165 - 270	75 - 130

Add subparagraph (g) to Article 1032.06:

(g) Penetrating Emulsified Asphalt (PEA). The penetrating emulsified asphalt shall meet the following requirements when tested according to AASHTO T59:

Viscosity, Saybolt Fural @ 25°C (77°F),	sec:	20 - 500
Sieve Test, retained on 850 μm (No. 20) sieve, maximum,	%:	0.10
Storage Stability Test, 1 day, maximum,	%:	1
Float Test @ 60°C (140°F), minimum,	sec:	150
Stone Coating Test, 3 minutes,	:	Stone Coated Thoroughly
Particle Charge	:	Negative
pH, minimum	:	7.3
Distillation Test:		
Distillation to 260°C (500°F) Residue, minimum	%:	65
Oil Distillate by Volume, maximum	%:	3
Test on residue from distillation:		
Penetration @ 25°C (77°F), 100 g, 5 sec, minimum	dmm:	300

Replace the last sentence and table of Article 1032.06 with the following:

The different grades are, in general, used for the following.

Grade	Use
SS-1, SS-1h, CSS-1, CSS-1h, HFE 90, SS-1hP, CSS-1hP	Tack or fog seal
PEP	Bituminous surface treatment prime
RS-2, HFE 90, HFE 150, HFE 300, CRSP, HFP, CRS-2, HFRS-2, PEA	Bituminous surface treatment
CSS-1h Latex Modified	Microsurfacing

BOYNTON ROAD DISTRICT
TWP. 22N, R 3W, 3rd P.M.
22-01000-01-GM

EAF CM-16 Slag

CA-16

Townhall Rd - TR 188

Bethel Rd - TR 244

Market Rd - TR 257

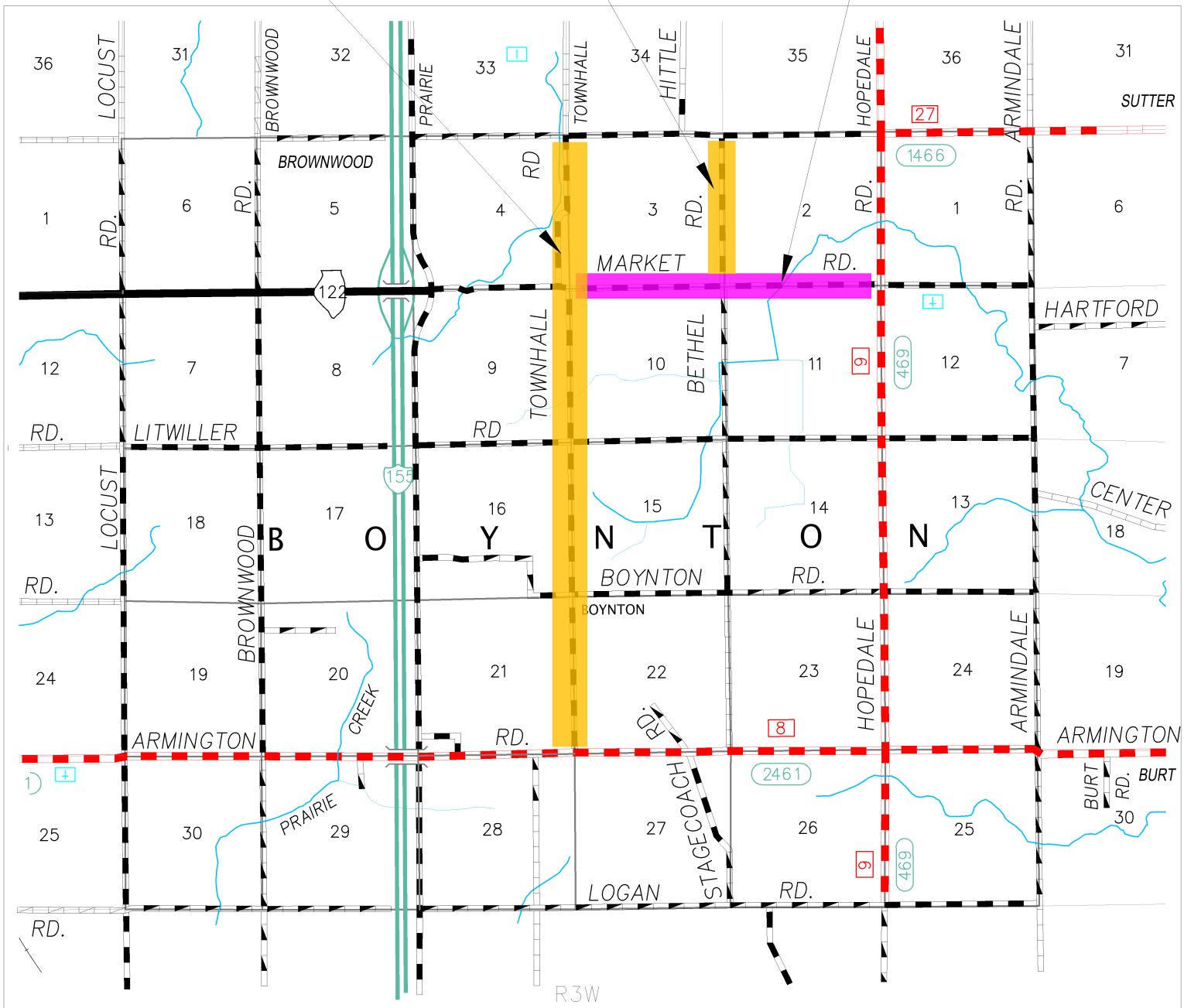

Boynton R.D.
Tazewell County
22-01000-01-GM

QUANTITIES

Route/Section	Length (ft)	Width (ft)	Area (SY)	CRS-2P Gallons	EAF Slag Tons	CA-16 Tons
Market Rd / TR 257	9,780	20	21,733	11,953	326	
Townhall Rd / TR 188	5,200	19	10,978	4,611		148
Townhall Rd / TR 188	15,830	18	31,660	13,297		427
Bethel Rd / TR 244 *	5,150	20	11,474	4,819		155
Total:	**35,960**		**75,846**	**34,680**	**326**	**731**

All Quantities "Furnished & Applied"
*Denotes area includes intersection radii

Polymerized Bituminous Materials (Seal Coat) CRS-2P: **147** **TON**
Rate = 0.42 Gal/SY for CA-16
Rate = 0.55 Gal/SY for EAF CM-16 Slag

Seal Coat Aggregate (CA-16) **731** **TON**
Rate = 27 #/SY

Seal Coat Aggregate (EAF CM-16 Slag) **326** **TON**
Rate = 30 #/SY

Traffic Control and Protection (Special) **1 LUMP SUM**
For entire Project

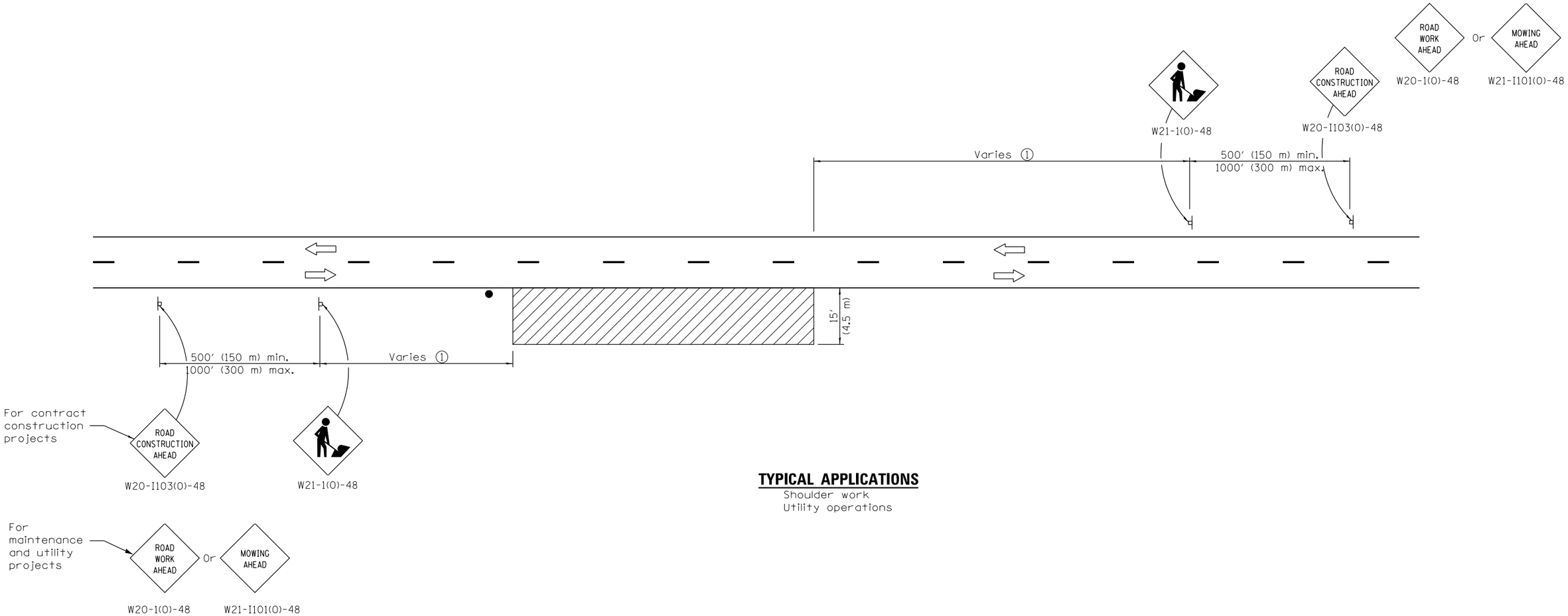

TYPICAL APPLICATIONS

Shoulder work
Utility operations

① Minimum distance is 200′ (60 m). Maximum distance to be determined by the Engineer but should not exceed ½ the length required for one normal working day's operation, or 4 miles (6.4 km) whichever is less.

GENERAL NOTES

This Standard is used where at any time, any vehicle, equipment. workers or their activities require an intermittent or continuous moving operation on the shoulder, where the average speed is 1 mph (2 km/h) or less.

When the work operation does not exceed 60 minutes, traffic control may be according to Standard 701301.

All dimensions are in inches (millimeters) unless otherwise shown.

SYMBOLS

Work area

Sign

Flagger with traffic control sign when required

Illinois Department of Transportation

APPROVED January 1, 2014
ENGINEER OF SAFETY ENGINEERING

APPROVED January 1, 2014
ENGINEER OF DESIGN AND ENVIRONMENT

ISSUED 1-1-97

DATE	REVISIONS
1-1-14	Revised workers sign
	number to agree with
	current MUTCD.
1-1-13	Omitted text 'WORKERS'
	sign.

OFF–RD MOVING OPERATIONS, 2L, 2W, DAY ONLY

STANDARD 701011–04

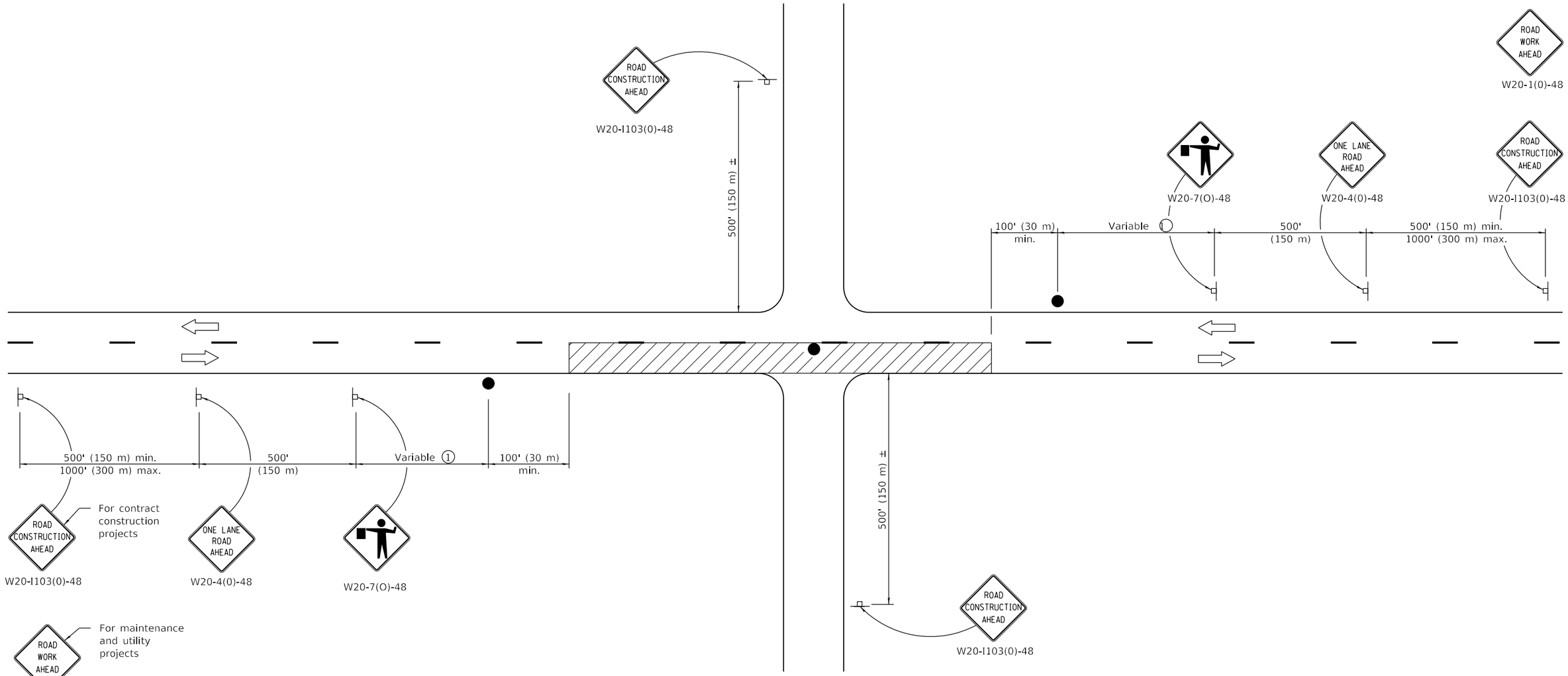

TYPICAL APPLICATIONS

Bituminous resurfacing
Milling operations
Utility operations
Shoulder operations

SYMBOLS

Work area

Sign on portable or permanent support

Flagger with traffic control sign

(1) Minimum distance is 200' (60 m). Maximum distance to be determined by the Engineer but should not exceed ½ the length required for one normal working day's operation or 2 miles (3200 m), whichever is less.

GENERAL NOTES

This Standard is used where at any time, any vehicle, equipment, workers or their activities require an intermittent or continuous moving operation on the pavement where the average speed of movement is greater than ½ mph (1 km/h) and less than 4 mph (6 km/h).

When the operation does not exceed 60 minutes, traffic control may be according to Standard 701301.

All dimensions are in inches (millimeters) unless otherwise shown.

Illinois Department of Transportation

PASSED January 1, 2018
ENGINEER OF SAFETY PROG. AND ENGINEERING

APPROVED January 1, 2018
ENGINEER OF DESIGN AND ENVIRONMENT

ISSUED 1-1-97

DATE	REVISIONS
1-1-18	Revised lower speed limit
	for operation to ½ mph.
1-1-11	Revised flagger sign.

LANE CLOSURE, 2L, 2W, SLOW MOVING OPERATIONS DAY ONLY, FOR SPEEDS ≥ 45 MPH

STANDARD 701306-04

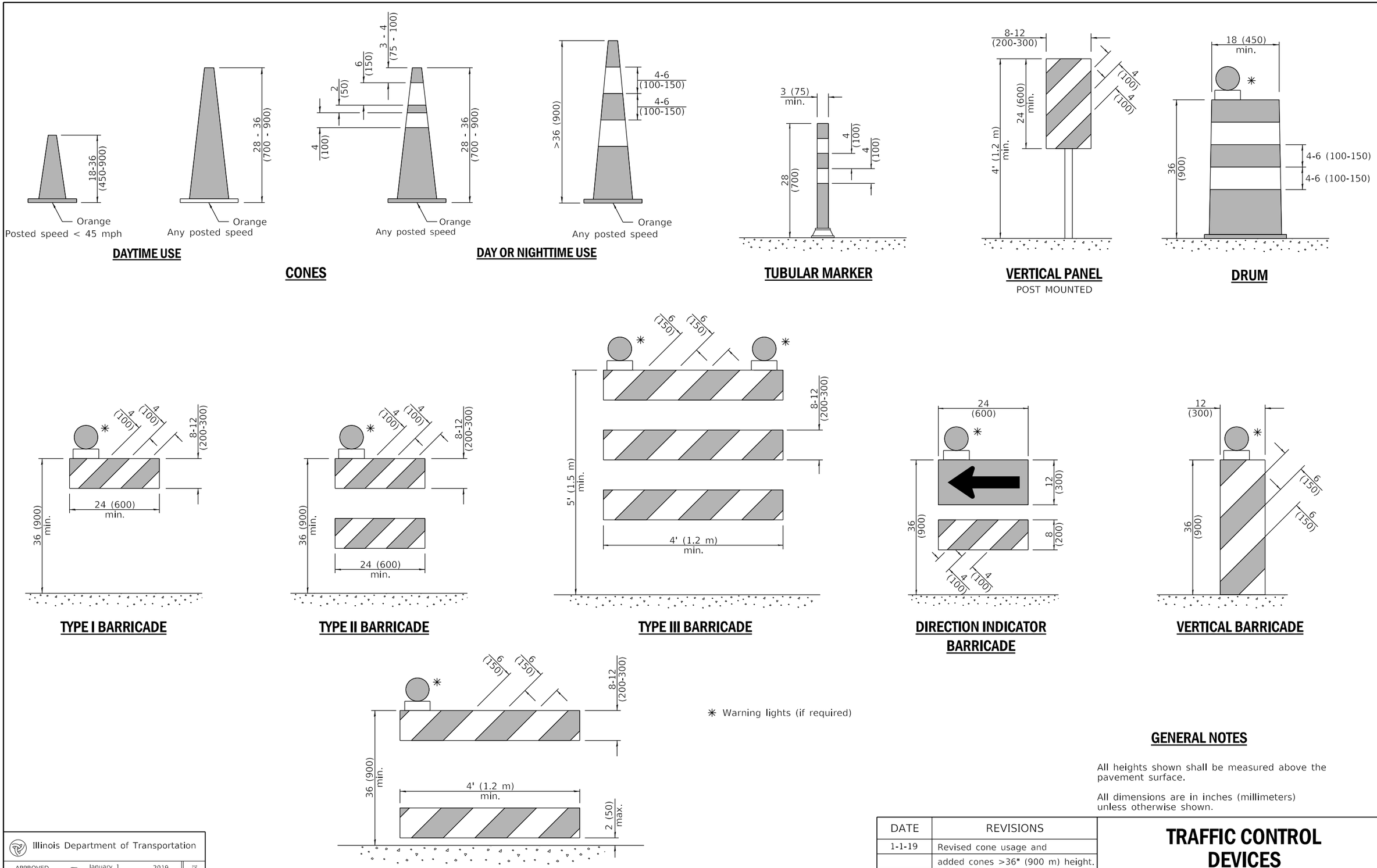

GENERAL NOTES

All heights shown shall be measured above the pavement surface.

All dimensions are in inches (millimeters) unless otherwise shown.

Illinois Department of Transportation

APPROVED January 1, 2019
ENGINEER OF SAFETY PROG. AND ENGINEERING

APPROVED January 1, 2019
ENGINEER OF DESIGN AND ENVIRONMENT

ISSUED 1-1-13

DATE	REVISIONS
1-1-19	Revised cone usage and
	added cones >36" (900 m) height.
1-1-18	Revised END WORK ZONE
	SPEED LIMIT sign from
	orange to white background.

TRAFFIC CONTROL DEVICES

(Sheet 1 of 3)

STANDARD 701901-08

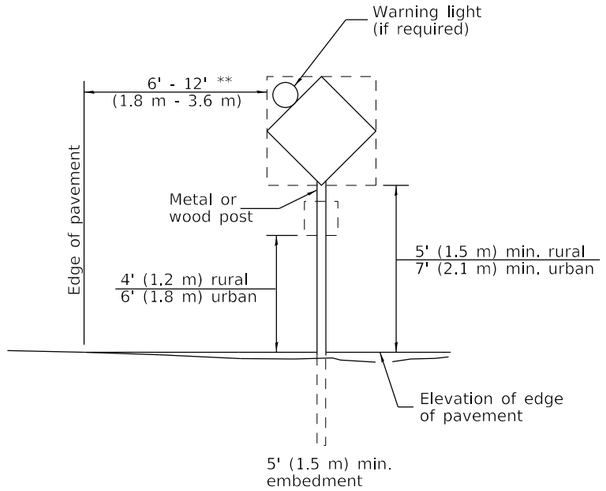

POST MOUNTED SIGNS

** When curb or paved shoulder are present this dimension shall be 24 (600) to the face of curb or 6' (1.8 m) to the outside edge of the paved shoulder.

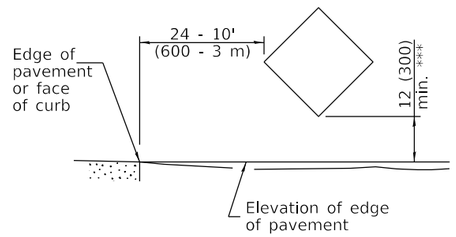

SIGNS ON TEMPORARY SUPPORTS

*** When work operations exceed four days, this dimension shall be 5' (1.5 m) min. If located behind other devices, the height shall be sufficient to be seen completely above the devices.

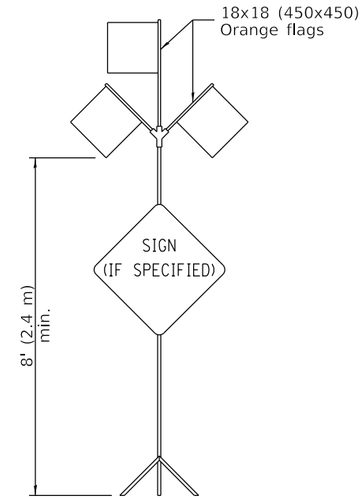

HIGH LEVEL WARNING DEVICE

G20-I104(0)-6036 G20-I105(0)-6024

This signing is required for all projects 2 miles (3200 m) or more in length.

ROAD CONSTRUCTION NEXT X MILES sign shall be placed 500' (150 m) in advance of project limits.

END CONSTRUCTION sign shall be erected at the end of the job unless another job is within 2 miles (3200 m).

Dual sign displays shall be utilized on multi-lane highways.

WORK LIMIT SIGNING

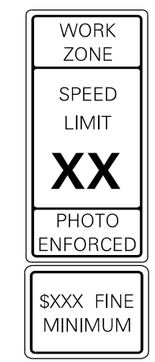

W21-III5(0)-3618

R2-1-3648

R10-I108p-3618 ****

R2-I106p-3618

Sign assembly as shown on Standards or as allowed by District Operations.

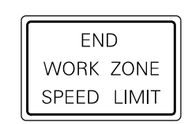

G20-I103-6036

This sign shall be used when the above sign assembly is used.

HIGHWAY CONSTRUCTION SPEED ZONE SIGNS

**** R10-I108p shall only be used along roadways under the juristiction of the State.

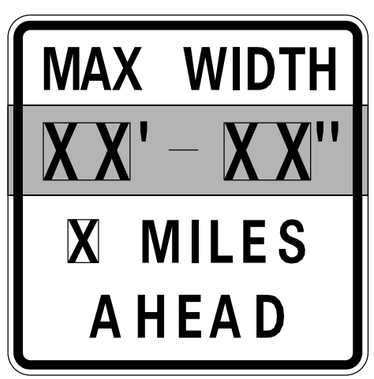

W12-I103-4848

WIDTH RESTRICTION SIGN

XX'-XX" width and X miles are variable.

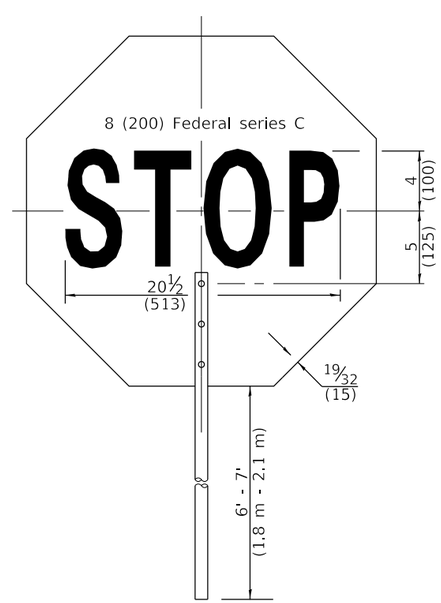

FRONT SIDE

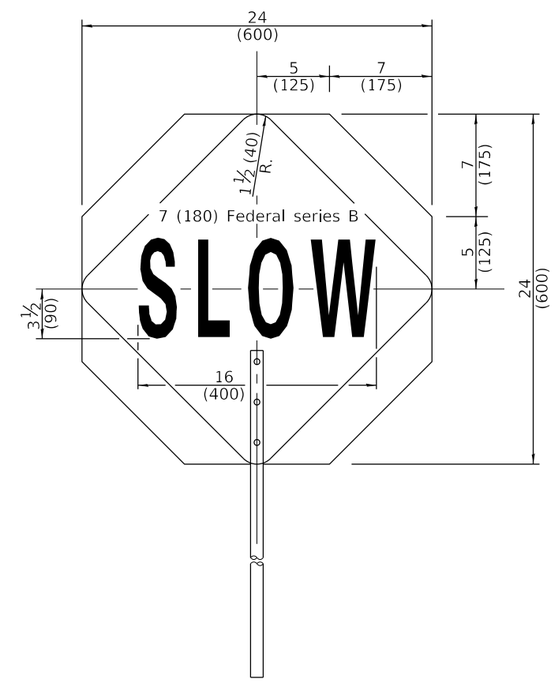

REVERSE SIDE

FLAGGER TRAFFIC CONTROL SIGN

Illinois Department of Transportation

APPROVED January 1, 2019
ENGINEER OF SAFETY PROG. AND ENGINEERING

APPROVED January 1, 2019
ENGINEER OF DESIGN AND ENVIRONMENT

ISSUED 1-1-13

TRAFFIC CONTROL DEVICES

(Sheet 2 of 3)

STANDARD 701901-08

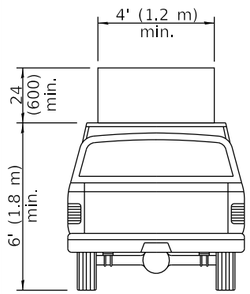

TYPE A
ROOF
MOUNTED

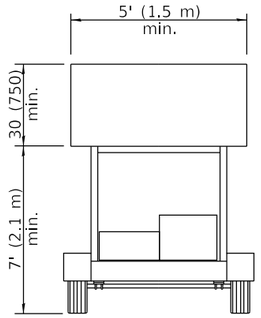

TYPE B
ROOF OR TRAILER
MOUNTED

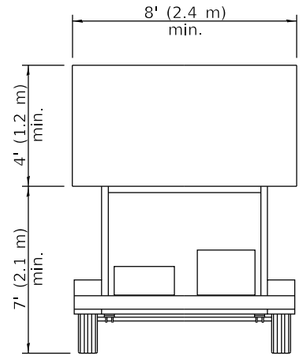

TYPE C
TRAILER
MOUNTED

ARROW BOARDS

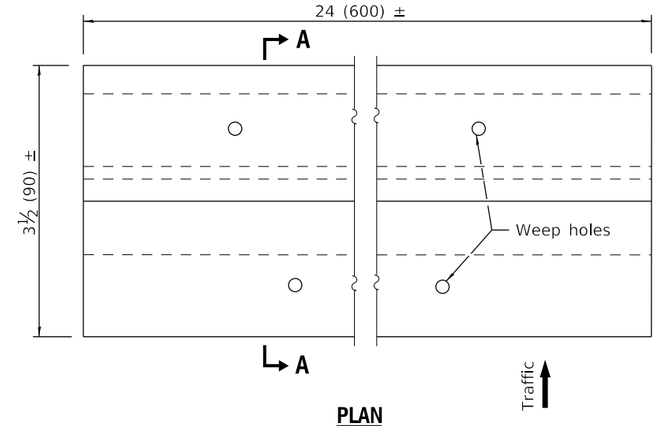

PLAN

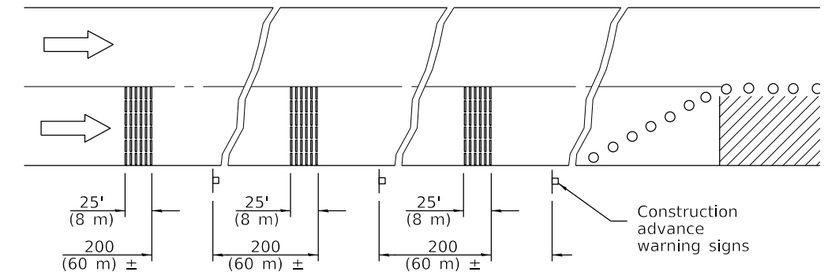

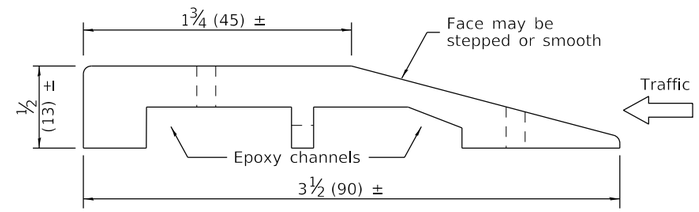

SECTION A-A

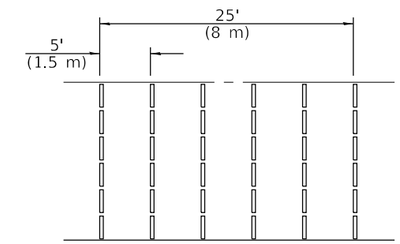

TYPICAL INSTALLATION

TEMPORARY RUMBLE STRIPS

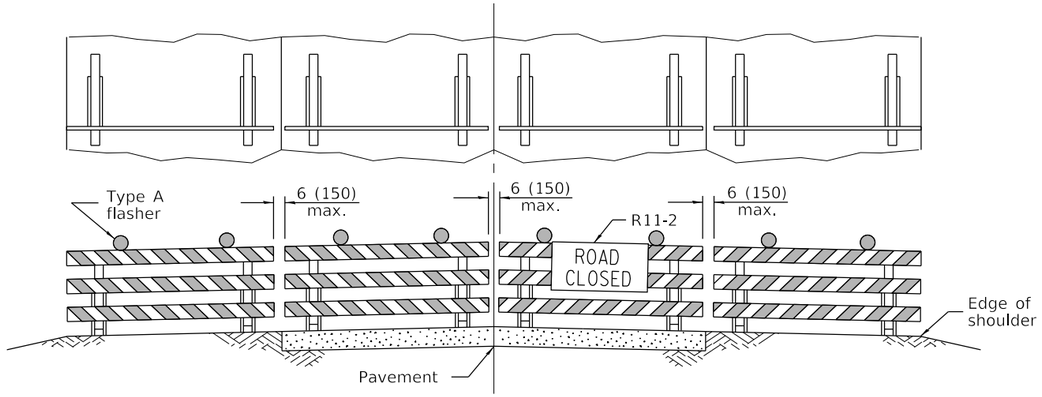

ROAD CLOSED TO ALL TRAFFIC

Reflectorized striping may be omitted on the back side of the barricades. If a Type III barricade with an attached sign panel which meets NCHRP 350 is not available, the sign may be mounted on an NCHRP 350 temporary sign support directly in front of the barricade.

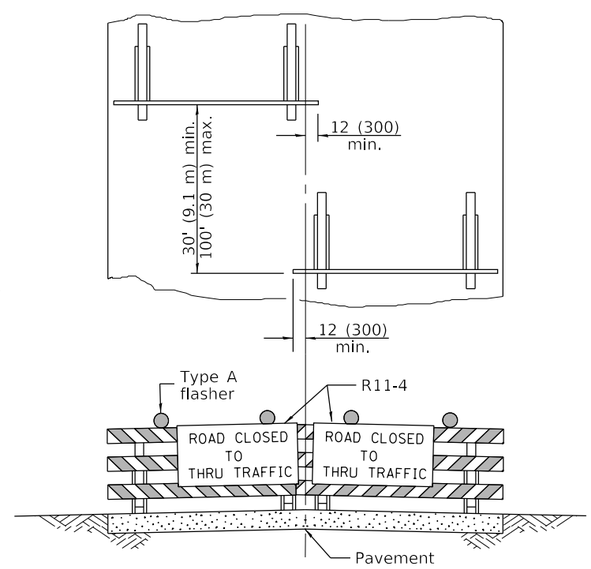

ROAD CLOSED TO THRU TRAFFIC

Reflectorized striping shall appear on both sides of the barricades. If a Type III barricade with an attached sign panel which meets NCHRP 350 is not available, the signs may be mounted on NCHRP 350 temporary sign supports directly in front of the barricade.

TYPICAL APPLICATIONS OF
TYPE III BARRICADES CLOSING A ROAD

Illinois Department of Transportation

APPROVED January 1, 2019
ENGINEER OF SAFETY PROG. AND ENGINEERING

APPROVED January 1, 2019
ENGINEER OF DESIGN AND ENVIRONMENT

ISSUED 1-1-13

TRAFFIC CONTROL DEVICES

(Sheet 3 of 3)

STANDARD 701901-08